PoWer TIG Series

GeKaMac®

POWER TIG
WB 350 AC DC PULSE

Users Manual

Please Read and Understand This Manual
Before Operating The Welding Machine

www.gedikwelding.com

This machine is for internal use only.

It complies with the WEEE Directive.

This machine has been designed in accordance with the EN 60974-1 and EN 60974-10 standards.

The machine is safe when installation, operation, and maintenance are performed in accordance with the user manual and regulations. The operator and machine owner are responsible for adhering to safety rules.

Gedik Kaynak San. Ve Tic. A.Ş. assumes no responsibility for safety or CE compliance if any modifications are made to the machine or if safety rules are not followed.

This Class A equipment is not suitable for use in homes and similar residential areas where the power supply is provided by the low-voltage public electricity network.

This machine is not household waste and cannot be disposed of in the trash.

When the machine reaches the end of its service life or becomes obsolete, it must be disposed of in accordance with regulations.

COMPLIES WITH THE WEEE DIRECTIVE.

Eco Design Statement

This machine has been designed and manufactured in accordance with the requirements of the 2009/125/EC Eco Design Directive concerning the environmentally friendly design of energy-related products.

Accordingly, machines with an idle mode are as follows.

	Idle Mode
MMA	**X**
MIG	√
TIG	√
Plazma	√
SAW	**Out of Scope**

Efficiency measurements should be conducted only on the power unit. The water cooling system should be disabled. For more information on measurements and machine settings, Gedik Kaynak Sanayi ve Ticaret A.Ş. should be consulted.

AT UYGUNLUK BEYANI

EU DECLARATION OF CONFORMITY

Bu uygunluk beyanı yalnızca imalatçının sorumluluğu altında düzenlenir.

This declaration of conformity is issued under the sole responsibility of the manufacturer.

İstanbul, Turkey, 08.03.2024

İmalatçı / Manufacturer

GEDİK KAYNAK SANAYİ ve TİCARET A.Ş.

Ankara Cad. No.306 Seyhli Pendik ISTANBUL TURKIYE

Ürün / Product	ARC WELDING MACHINE
Marka-Model / Brand- Model	POWER TIG WB 350 AC/DC PULSE

Yukarıda tanımlanan beyanın nesnesi ilgili uyumlaştırılmış AB mevzuatı ile uyumludur.

The object of the declaration described above, is in conformity with the relevant union harmonisation legislation.

Direktifler / Directives	2014/30/EU & 2014/35/EU & 2009/125/EC EU/2019/1784

Uyumlaştırılmış standartlar ve uygunluğun deklare edilmesiyle ilişkili diğer referanslar.

References to the relevant harmonised standarts used and references to the other technical specifications in relation to which conformity is declared.

Standartlar / Standards	EN IEC 60974-1 EN IEC 60974-10

Bu ekipman, talimatlara uygun kurulduğunda, bakımı yapıldığında ve kullanıldığında belirtilen standartlara uygundur. Makine üzerinde bir değişiklik yapıldığında veya yanlış kullanımda deklarasyon geçersiz olur.

The equipment is in compliance with pertinent legislation when installed, utilized, and maintained in accordance with the enclosed instructions. This declaration will be invalid under any modification or improper use.

İmalatçı Adına İmzalayan / Signed for and on behalf of:

Hatice Özel, Equipment Business Unit Director

Forward

Thank you for your purchase of GekaMac's welding power source.

This Owner's Manual (hereafter referred to as "this manual") explains the following points for safe use of the product.

- Caution regarding the product
- Welding operation/setting method
- Daily maintenance (cleaning, inspection)
- Troubleshooting

Store this manual in a safe place so that it can be referred whenever necessary.

Important Information

Use of the Product

This product is a power supply unit designed and manufactured for use in arc welding.

Do not use the product for any other purposes.

Safe Use of the Product

For safe use of the product (hereafter referred to as welding power source), ensure to follow the instructions below:

- This manual is intended for workers who are familiar with the listed terminologies. If this product is going to be operated or serviced by workers who are not familiar with the terminology, the responsibility falls on the customer to provide thorough training on operation and safety.
- This equipment and this manual are for use only by persons trained and experienced in the safety operation of welding equipment. Untrained persons must complete the "Special workshop for arc welding".
- For protection from possible injury or damage in the equipment, be sure to read and follow the safety information in this manual. Do not use it for purposes not indicated in the manual.
- Make sure that installation/operation/maintenance of the welding power source and welding machine is performed by a qualified personnel with sufficient knowledge and skills.
- If this manual is lost or damaged, immediately contact your dealer.

Copyright

This manual is copyrighted and all rights are reserved by GekaMac. Any part of the manual shall not be copied, photocopied, or reproduced without the prior consent of GekaMac.

When Exporting the Product

The following conditions are to be observed and met when exporting the product outside of the country.

- The product is designed and manufactured according to the Japanese laws/specification and industrial standards. The product may not conform to laws/specification and standards in other countries.
- When shipping or reselling the product outside of the country, make sure to contact your dealer in advance.

Disposal of the Product

For disposal of welding equipment including the welding power source and welding material, confirm the regulation of the country/region in which the equipment is located and follow the rules. When disposing, arrange consignment contract for waste disposal with an authorized waste collectors and manage the disposal processes.

Service and Support

See the back cover for contact numbers and mailing addresses. When contacting your dealer for service, you are required to provide the following information:

- Name, address, telephone number
- Product model, manufacture year, serial number, and software version number
  (Refer to the diagram below for product information. Attachment location and content of nameplate may vary depending on the purchased product.)

<Example> Attachment location of the nameplate

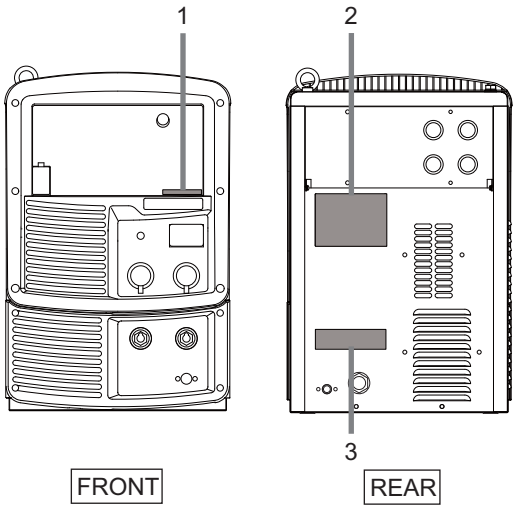

No.	Serial No.
1	• Serial number (Same number as the nameplate in the rear) #X#####X ###########
2	• Product model XX-X###X • Manufacture year #### year • Serial number #X#####X ###########
3	• Software version number X##### Ver ###.###.###.###

TABLE OF CONTENTS

Forward i
Important Information ii
Use of the Product ii
Safe Use of the Product ii
Copyright ii
When Exporting the Product ii
Disposal of the Product ii
Service and Support iii

CHAPTER 1 SAFETY INFORMATION

1.1 Warning Symbols 1-1
1.2 Safety Precaution 1-1
1.2.1 Operating precautions 1-1
1.2.2 Precautions for power supply and electric shock 1-2
1.2.3 Precautions for air discharge and use of respiratory protective equipment 1-3
1.2.4 Precautions for flammable materials 1-4
1.2.5 Precautions for gas cylinder and gas regulator . 1-5
1.2.6 Precautions for handling of plastic parts 1-5
1.2.7 Precautions for disassembling and modifying the welding power source 1-6
1.2.8 Precaution for protective equipment 1-6
1.2.9 Precautions for rotating part 1-6
1.2.10 Precautions for high-frequency wave 1-7
1.2.11 Precautions for voltage reducing device 1-7
1.3 Principal Safety Standards 1-8

CHAPTER 2 PRODUCT SPECIFICATION AND CONFIGURATION

2.1 Specification 2-1
2.1.1 Specifications 2-1
2.1.2 External dimensions 2-2
2.1.3 Rated duty cycle 2-2
2.2 Product Configuration 2-3
2.2.1 Standard composition 2-3
2.2.2 Accessory (supplied) 2-4
2.2.3 Accessory (not supplied) 2-5
2.2.4 Optional accessories 2-5
2.3 Part Names 2-11
2.3.1 Front panel 2-11
2.3.2 Rear panel 2-11

CHAPTER 3 TRANSPORTATION AND INSTALLATION

3.1 Required Equipment 3-1
3.1.1 Welding power source equipment 3-1
3.1.2 Ventilation equipment/partial exhaust facility . . . 3-2
3.2 Installation Environment 3-3
3.2.1 Installation environment 3-3
3.2.2 Electromagnetic interference 3-4
3.3 Transportation Procedure 3-5
3.3.1 Transportation with lifting lug 3-6

CHAPTER 4 CONNECTION

4.1 Precautions for Connection Procedure and Grounding 4-1
4.2 Connecting the Welding Power Source . . 4-2
4.2.1 Connection of cable (base metal side) 4-3
4.2.2 Connection of TIG welding torch 4-4
4.2.3 Connection of DC STICK welding torch 4-7
4.2.4 Connection of shield gas 4-8
4.3 Grounding and Connection of Input Power Supply 4-9
4.4 Confirmation of Connection 4-10
4.5 Connection of Voltage Reducing Device 4-11
4.5.1 Installation to welding power source 4-11
4.5.2 Connection of output cable 4-12
4.5.3 Grounding and Connection of Input Cable . . . 4-13
4.6 Connection of External Equipment 4-13
4.6.1 Connection with external equipment 4-13

CHAPTER 5 WELDING OPERATION

5.1 Precaution at Welding Operation 5-1
5.1.1 Precautions for air discharge and use of respiratory protective equipment 5-1
5.1.2 Precaution for protective equipment 5-2
5.1.3 Precautions on welding place 5-2
5.1.4 Precautions for high-frequency wave 5-3
5.2 Check before Welding 5-3
5.3 Power ON and Gas Supply 5-4
5.4 Check and Setting of Welding Condition . 5-5
5.4.1 Reading welding condition 5-5
5.4.2 Preventing erroneous operation on operation panel (Erroneous operation prevention function) 5-5
5.5 Performing Welding Operation 5-6
5.5.1 Operation of welding start 5-6
5.5.2 Operation during welding 5-7
5.5.3 Operation at welding end 5-8

CHAPTER 6 WELDING CONDITION

6.1 List of Welding Conditions 6-1
6.1.1 Parameter (Welding parameter) 6-1
6.1.2 Function 6-2
6.1.3 Internal function 6-2
6.2 Function on Operation Panel 6-6
6.3 Welding Conditions 6-8
6.3.1 Basic welding conditions 6-8
6.3.2 Useful functions 6-8
6.4 Preparing Welding Conditions 6-9
6.5 Memory Function of Welding Conditions . 6-9
6.5.1 Memory registration of welding conditions . . . 6-10
6.5.2 Read out of welding conditions 6-11
6.5.3 Deletion of memory registration 6-12
6.6 Setting Welding Conditions 6-13
6.6.1 Setting welding parameter 6-13

6.6.2 Start setting (Touch/High-frequency) 6-14
6.6.3 Crater setting 6-16
6.6.4 Slope setting 6-18
6.6.5 Arc spot time 6-19
6.6.6 Pulse setting 6-20
6.7 Settings for AC TIG Welding and AC-DC TIG Welding 6-20
6.7.1 Functions of AC TIG welding and AC-DC TIG welding 6-21
6.7.2 Setting AC waveform 6-21
6.7.3 Setting AC frequency 6-21
6.7.4 Setting cleaning width 6-22
6.7.5 Setting AC-DC switchover frequency 6-23
6.8 Adjusting current with torch switch. . . . 6-24
6.9 Welding Setting Guide. 6-25
6.9.1 Settings of Welding Setting Guide 6-25
6.9.2 Details of Welding Setting Guide 6-26
6.9.3 Revising and exiting Welding Setting Guide . 6-27
6.9.4 Affixing guide plate for welding settings 6-28
6.10 Setting Internal Functions. 6-28
6.10.1 Setting procedure. 6-28
6.10.2 Detailed information on internal functions . . . 6-30
6.11 Operation of Analog Remote Control (Optional) 6-47

CHAPTER 7 ADMINISTRATOR FUNCTIONS

7.1 Protection of Welding Conditions 7-1
7.1.1 Setting/Changing password 7-1
7.1.2 Disabling erroneous operation prevention 7-3
7.2 Welding Result Control Function 7-4
7.2.1 Setting welding result control function 7-4
7.2.2 Details of welding control items 7-5
7.3 Data Backup (Utilization of data) 7-9
7.3.1 Setting of welding conditions/internal functions. 7-9
7.3.2 Simplified data log function 7-11
7.3.3 Failure log function. 7-12
7.3.4 Welding Result Control Function 7-13
7.3.5 Backup operation 7-13
7.3.6 Importing backup data 7-14
7.4 Initializing Welding Conditions and Internal Functions 7-15
7.5 Checking Software Version 7-16

CHAPTER 8 MAINTENANCE AND INSPECTION

8.1 Precautions for Maintenance and Inspection. 8-1
8.2 Daily Inspection 8-3
8.3 Periodical Inspection. 8-4
8.4 Periodical Replacement Parts 8-5
8.5 Insulation Resistance Measurement and Withstand Voltage Test 8-6

CHAPTER 9 TROUBLESHOOTING

9.1 Action in Case of Error 9-1
9.2 Troubleshooting 9-3

CHAPTER 10REFERENCE MATERIALS

10.1 Parts List 10-1
10.2 Reference Drawing 10-3
10.2.1 Schematic diagram 10-4
10.2.2 Parts layout drawing 10-6
10.3 Materials for Setting Welding Conditions 10-7
10.3.1 Guide for changing welding conditions 10-7
10.3.2 Samples of welding condition settings 10-7

(MEMO)

Chapter 1 Safety Information

This chapter explains the precautions on the welding power source and welding operation.

1.1 Warning Symbols

The following safety warning symbols and signs are used throughout the manual to ensure proper operation of the product and to prevent from various hazards that cause serious injury and damages. Indication and explanation for the symbols are as follows:
Make sure to fully understand the content before beginning operation.

The below symbols are categorized by the degree of possible hazard and damage.

Symbols	Explanation
⚠ WARNING	Gives information regarding possible personal injury or loss of life if the product is used improperly.
⚠ CAUTION	Refers to minor personal injury or possible equipment damage if the product is used improperly.

The below symbols are categorized according to the content to be followed.

Symbols	Explanation
❗	Instruction: indicates "Instruction" matters to be followed.
⃠	Prohibited: indicates "Prohibited" matters.

1.2 Safety Precaution

This section explains the safety precautions regarding operation of the welding power source.

1.2.1 Operating precautions

To prevent serious injury or accidents, ensure to follow the instructions below:

⚠ WARNING

- **Be sure to read and understand the information in the manual before operating the product. Have only trained and experienced personnel perform operation of welding power source or welding machine.**
- **Perform construction work on primary power source in the facility, selection of installation space, operation/storage/piping of high pressure gas, storage of welded products, and disposal of waste in accordance with local law and/or regulation at the customer's facility.**
- **Be sure to take appropriate measures during welding so that no person is allowed unauthorized access near the welding machine or work areas.**
- **Only authorized personnel or person with full understanding and experience of the welding machine must perform installation, maintenance and repair of welding machine.**
- **Make sure to attach a safety belt when working at high locations.**

⚠ WARNING

- For those with pacemaker, avoid being close to the machine during operation or work area until obtaining physician's approval. Machine at operation will generate magnetic field nearby that may cause influence upon the working of pacemaker.
- Do not use the welding power source for purpose other than welding such as thawing a frozen pipe.
- Do not use the welding power source when the case and the cover are removed.
- Removing the cases for maintenance, inspection and repair should be performed by qualified persons or persons familiar with the welding machine. Also put up a barrier around the welding machine or take other necessary measure to prevent other people from getting in the nearby area.

1.2.2 Precautions for power supply and electric shock

To prevent electric shock or burn injury, ensure to follow the instructions below:

⚠ WARNING

- Do not touch the input and output terminals and the internal live electrical parts of the welding power source.
- Have a qualified electrical engineer ground the case of the welding power source and base metal or jig electrically connected in accordance with local regulation.
- Before starting maintenance and inspection, make sure to cut the input power with the disconnect switch in the box connected with the welding power source and wait three minutes or more.
  The capacitors may be still charged even after the input power is cut. Make sure that there is no charged voltage before starting the work.
- Wear dry insulating gloves for protection. Do not use damaged or wet gloves.
- Tighten all cable connections and insulate them.
- Do not wrap cables around the body.
- Perform periodical maintenance and repair damaged parts if any before use.
- Turn off POWER switch of all the related equipment when not in use.
- Periodically blow the parts of welding power source with dry compressed air to remove dust.
  Powder dust accumulating inside may cause insulation deterioration, resulting in electric shock or fire.
- Do not use a cable with insufficient capacity, serious damage or cable without grounding.

⚠ CAUTION

- When the power switch is tripped, never turn it on again and contact your dealer.

1.2.3 Precautions for air discharge and use of respiratory protective equipment

To prevent suffocation or gas poisoning in the welding operation, ensure to follow the instructions below:

⚠ WARNING

- **When welding is required in tank, boiler, reaction tower, or hold of a ship, closed space, or any other places of poor ventilation, ensure to provide ventilation equipment.**
- **Gas of larger gravity than that of oxygen, such as carbon dioxide gas or argon gas, retains at the bottom part.**
  To prevent anoxia due to the retention gas, provide ventilation equipment.
- **When it is difficult to provide ventilation equipment or the ventilation equipment does not give sufficient performance, ensure to use respiratory protective equipment.**
  For preventive measure from falling due to anoxia, apply lifelines such as a safety belt.
- **For the welding operation in a narrow space, perform the operation with the trained supervisor.**
- **Periodically inspect the ventilation equipment to ensure correct and proper performance of ventilation.**

To prevent any health damage due to poisonous gas or particle substances (fume) emitted in the welding operation, ensure to follow the instructions below:

⚠ WARNING

- **To reduce the dust concentration, install a partial exhaust facility such as fume suction device, or install the collective ventilation equipment.**
- **When it is difficult to provide a partial exhaust facility or the ventilation or exhaust facility does not give sufficient performance, ensure to use the respiratory protective equipment.**
- **In performing welding or cutting the coating steel plate or galvanized steel sheet, provide a partial exhaust facility or let the welding operator as well as the surrounding operators use respiratory protective equipment. (Welding or cutting the coating steel plate or galvanized steel sheet will cause toxic gas or fume.)**
- **Do not perform welding operation in the vicinity of degreasing, cleansing, or spraying operation. Performing the welding operation in such places may generate poisonous gas.**

1.2.4 Precautions for flammable materials

To prevent fire, explosion and rupture, ensure to follow the instructions below:

⚠ WARNING

- Remove all flammables within 10 m (33 ft) of the welding arc so that sparks and spatter do not strike flammable materials. If this is not possible, tightly cover them with noncombustible covers.
- When welding on a ceiling, floor, bulkhead or partition, remove all flammable materials in hidden places.
- Tighten all cable connections and insulate them.
  Loose connection in the cable and current path of the base metal such as steel frame may cause electric shocks and fire hazards from energization.
- Connect power cable for base metal as close to the welding area as possible.
- Do not weld on gas pipe and closed containers such as tanks or drums.
- Performing arc welding on flammable object such as fuel tank may cause explosion. Furthermore, welding on closed container such as tanks and pipes may cause burst.
- Watch for fire and keep a fire extinguisher near the welding area.
- Periodically blow the parts of welding power source with dry compressed air to remove dust.
  Powder dust accumulating inside may cause insulation deterioration, resulting in electric shock or fire.
- Do not place hot base metal after welding near flammable materials.
  Spatter and hot base metal after welding can cause fire.
- Do not place the welding power source near combustible materials or flammable gas.
- Do not place the welding torch near the wire feeder or the frame of wire reel stand.
- When there is an electrical connection between a workpiece and the frame of wire feeder or the wire reel stand, arc may be generated and cause damage by a fire if the wire contacts the frame or the workpiece.

1.2.5 Precautions for gas cylinder and gas regulator

To prevent falling of gas cylinder, gas regulator explosion and accident caused by gas, ensure to follow the instructions below:

⚠ WARNING

- Use only correct shield gas cylinders according to the related laws, regulations and customer's standard.
  Gas cylinder contains compressed gas. Wrong operation may cause gas explosion, resulting in serious physical injury.
- Read and follow instructions on compressed gas cylinders, associated equipment, and the CGA publication P-1 listed in PRINCIPAL SAFETY STANDARDS.
- Keep the cylinder upright and securely chained to a stationary support or a rack.
  Falling or tipping of cylinder may cause serious injury.
  In opening the valve of gas cylinder, keep your face away from the gas discharge port.
- Keep protective cap in place over valve except when gas cylinder is in use or connected for use.
- Do not place the gas cylinder under high temperature.
- Protect compressed gas cylinders from excessive heat, mechanical shock, and arcs.
- Do not set welding torch to the cylinder or touch the cylinder with welding electrode.
- For the gas regulator, make sure to use a device for compressed gas cylinder that conforms to the specific application of the shield gas.
  Using an inappropriate gas regulator may cause explosion.

1.2.6 Precautions for handling of plastic parts

Front and rear panel of the welding power source is made from polycarbonate resin. To prevent from electric shock or fire caused by the damage on polycarbonate resin, ensure to follow the instructions below.

⚠ WARNING

- Do not apply external force or shock to the front and rear panels.
  Otherwise, damage and malfunction may occur.
- If there is dirt on plastic parts, soak a soft cloth in water, alcohol or neutral detergent, wring it well and wipe off the dirt.
  Do not use organic detergent or chemical agent. Doing so may cause crack (breaking) and degrade the strength.
- If there is any abnormality in the plastic parts such as front and rear panels, immediately stop the use and contact your dealer.
- Do not use the welding power source at location in which organic solvent, chemicals, cutting oil and composition oil adhere or atmosphere containing the above.
  Doing so may cause crack (breaking) and deterioration in the plastic part.

1.2.7 Precautions for disassembling and modifying the welding power source

To prevent electrical shock, fire, injury from malfunction and error in the welding power source, ensure to follow the instructions below:

⚠ WARNING

- Do not disassemble/modify the welding power source.
  Disassembling/modifying by customer is out of the warranty scope.

1.2.8 Precaution for protective equipment

For protection from arc ray generated from welding, spattering dross and hearing disorder from noise, observe the following:

⚠ WARNING

- When welding or watching a welder work, wear face shield with a proper shade of filter (See ANSI Z 49.1 listed in PRINCIPAL SAFETY STANDARDS) to protect the face and eyes.
- Wear safety goggles in the work area and the surrounding.
  Ignoring the above may cause injury in the eye or burn from spatter and spattering dross.
- Wear protective equipment such as protective leather gloves, long-sleeve clothes, leg covers, and leather apron.
  Ignoring the above may cause electrical shock and burn.
- Install protective screens or barriers to protect the eyes of others in the work area from arc ray.
- Wear an ear protector when noise level is high.
  Ignoring the above may cause hearing disorder.

1.2.9 Precautions for rotating part

To prevent being caught/pinched by the rotating parts, ensure to follow the instructions below:

⚠ WARNING

- Keep your hands, fingers, hairs and clothes away from the rotating cooling fan, open parts around the cooling fan and feed roll of the wire feeder.

1.2.10 Precautions for high-frequency wave

Observe the following safety measures to avoid the electromagnetic interference:

⚠ CAUTION

- Note that the following facilities or equipment nearby may cause high-frequency wave to invade and cause electromagnetic interferences:
  Input cable, signal cable, phone cable;
  Radio, television;
  Computers and other control unit;
  Industrial detector and safety equipment;
- Make the welding cables as short as possible.
- Run the welding cable as close to the floor or the ground as possible.
- The cable for base metal side and the cable for electrode side should be aligned with each other.
- Do not share the earth connections of the base metal and the welding power source with those of other machines.
- Close all the doors and covers of the welding power source and securely fix them not to come loose for use.
- If electromagnetic interference has occurred, follow the steps above as well as the safety measures described in "3.2.2 Electromagnetic interference".

1.2.11 Precautions for voltage reducing device

To prevent electric shock or burn injury, ensure to follow the safety instructions below.

⚠ WARNING

- Be sure to install a voltage reducing device when performing AC STICK welding in the following places.
  - places surrounded by electric conductors which are very small in space, such as inside of a double-bottom or peak tank of a vessel, of a drum or dome of a boiler
  - places in height of 2 m or higher where it is liable to cause dangers to workers due to fall and that is liable to workers contact grounding materials with high conductivity of steel frame, etc.

TIPS

- We sell Model K-300 as an exterior type voltage reducing device. For details, contact your dealer.

1.3 Principal Safety Standards

Arc welding equipment – Installation and use, Technical Specification
IEC 62081, from International Electro technical Commission

Arc welding equipment Part 1: Welding power sources IEC 60974-1, from International Electro technical Commission

Arc welding equipment Part 10: Electromagnetic compatibility (EMC) requirements IEC 60974-10, from International Electro technical Commission

⚠ WARNING

- **The class A equipment is not intended for use in residential locations where the electrical power is provided by the public low-voltage supply system. There may be potential difficulties in ensuring electromagnetic compatibility in those locations, due to conducted as well as radiated disturbances.**
- **This equipment does not comply with IEC 61000-3-12. If it is connected to a public low voltage system, it is the responsibility of the installer or user of the equipment to ensure, by consultation with the distribution network operator if necessary, that the equipment may be connected.**

Safety in Welding and Cutting, ANSI Standard Z49.1, from American Welding Society.
Safety and Health Standards, OSHA 29 CFR 1910, from Superintendent of Documents, U.S. Government Printing Office.

Recommended Practices for Plasma Arc Cutting, American Welding Society Standard AWS C5.2, from American Welding Society.

Recommended Safe Practices for the Preparation for Welding and Cutting of Containers That Have Held Hazardous Substances, American Welding Society Standard AWS F4.1, from American Welding Society.

National Electrical Code, NFPA Standard 70, from National Fire Protection Association. Safe Handling of Compressed Gases in Cylinders, CGA Pamphlet P-1, from Compressed Gas Association.

Code for Safety in Welding and Cutting, CSA Standard W117.2, from Canadian Standards Association, Standards Sales.

Safe Practices For Occupation And Educational Eye And Face Protection, ANSI Standard Z87.1, from American National Standards Institute.

Cutting And Welding Processes, NFPA Standard 51B, from National Fire Protection Association.

NOTE

- **The codes listed above may be improved or eliminated. Always refer to the updated codes.**

Chapter 2 Product Specification and Configuration

This chapter explains the specification, name of each parts and configuration of the welding power source.

2.1 Specification

This section explains the specification and external dimension of the welding power source.

2.1.1 Specifications

This chapter explains the specification of the welding power source.

Specification/Model	WB 350 AC/DC PULSE			
	AC TIG welding	DC TIG welding	AC STICK welding	DC STICK welding
Model	WB 350 AC/DC PULSE			
Number of phase	Three phase			
Rated frequency	50/60 Hz			
Rated input voltage	400 V			
Input voltage range	400 V ± 15%			
Rated input	12.7 kVA 11.1 kW	12.2 kVA 10.8 kW	16.3 kVA 14.6 kW	16.1 kVA 14.5 kW
Rated input current	18. 5 A	19.0 A	24.0 A	24.5 A
Rated output current	350 A	350 A	350 A	350 A
Rated output voltage	24 V	24 V	34 V	34 V
Rated output current range	5 to 350 A	2 to 350 A	10 to 350 A	
Maximum no-load voltage	74 V			
Rated duty cycle	40%		30%	
Number of welding condition	100			
Operating temperature range	–10 to 40			
Operating humidity range	up to 50% at 40 , up to 90% at 20			
Storage temperature range	–20 to 55			
Storage humidity range	up to 50% at 40 , up to 90% at 20			
External dimensions (W×D×H)	395 mm × 710 mm × 592 mm (w/o eyebolt)			
Mass	68 kg			
Static characterisitic	Constant current characteristic			
Starting method	High frequency start/Touch start			
Rated peak voltage (High frequency start circuit)	11.1 kV			

2.1.2 External dimensions

This section explains the external dimensions of the welding power source.

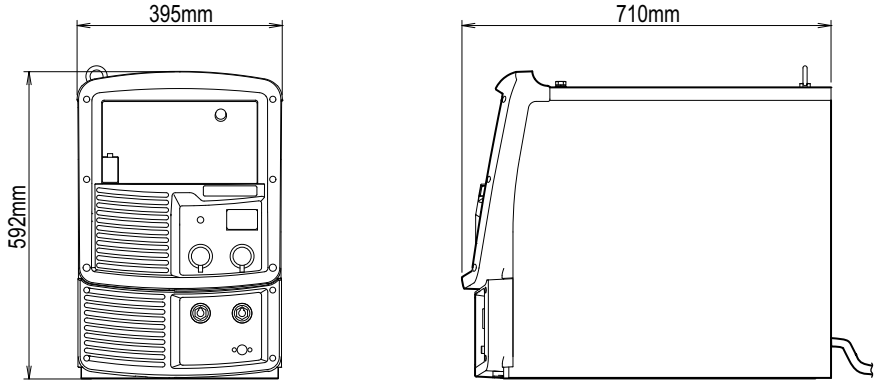

2.1.3 Rated duty cycle

This section explains the rated duty cycle of the welding power source.

⚠ CAUTION

- **Use this welding power source at or under the rated duty cycle.**
  Exceeding the rated duty cycle may result in deterioration and damage to the welding power source.
- **Periodically blow moisture-free compressed air to clean dust and dirt accumulated on the transistor and radiation fin of the diode.**
  If dust and dirt accumulate on the radiation fin, it may not only reduce the duty cycle but also result in degradation or burnout of the welding power source.

- The rated duty cycle of the welding power source is as follows.
  At TIG welding: 350 A/24 V 40%
  At STICK welding: 250 A/30 V 40%
  (Rated duty cycle of 40% means the power source must be rested for 6 minutes after 4 minutes of continuous welding at the rated current.)

<Operation cycle at duty cycle of 40%>

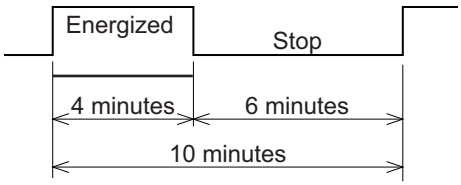

- Use the welding power source within its usable range by observing the duty cycle for the welding current.
- Use the welding power source within the lowest rated duty cycle of combined accessories such as welding torches.

<Relationship between welding current and duty cycle>

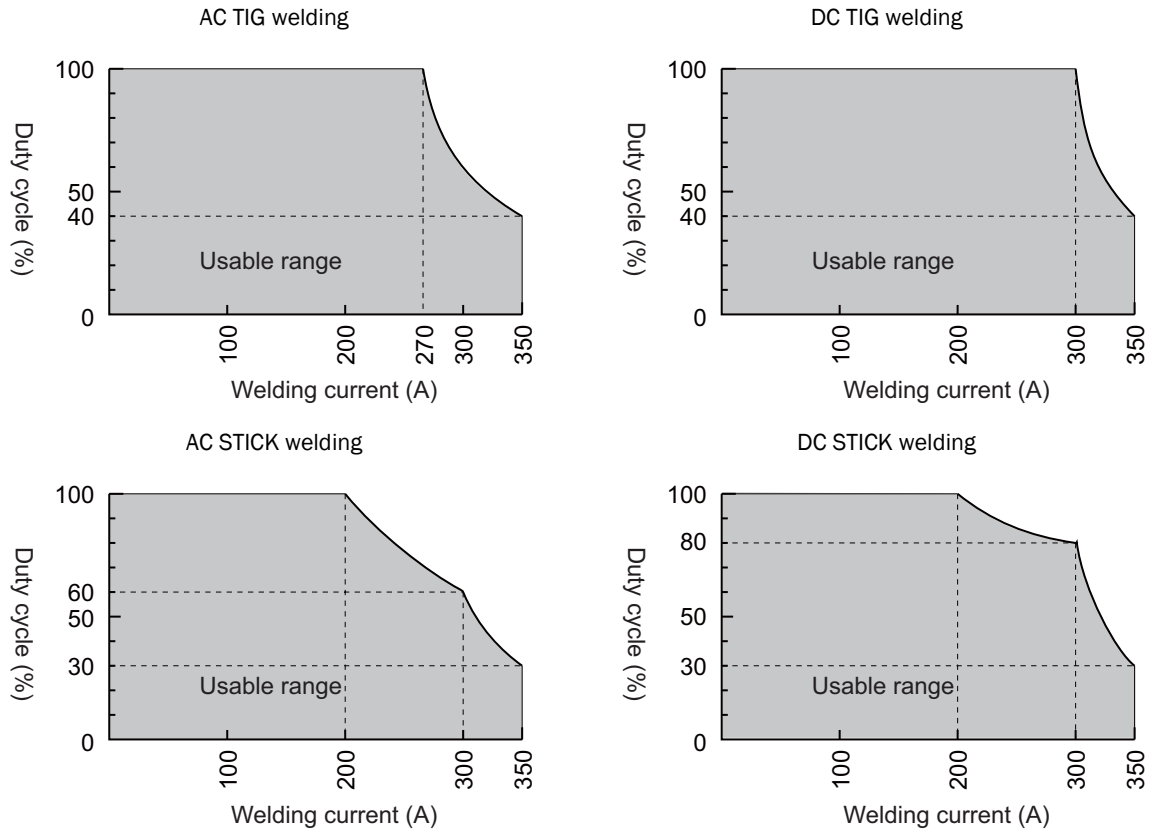

2.2 Product Configuration

This section explains the standard or optional composition of the welding power source and parts to be prepared by customers.

2.2.1 Standard composition

This section explains the standard composition of the welding power source.
For equipment used in combination with the welding power source connected to robot, refer to the instruction manual of the robot controller.

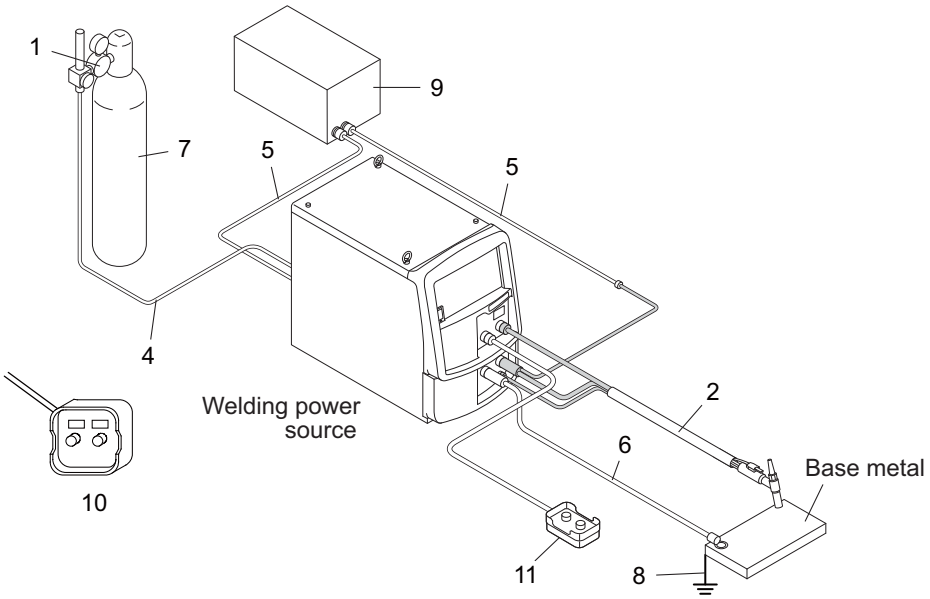

No.	Name	Supplied unit (*1)	Optional accessories	Remarks
1	Gas regulator			To be prepared by the customer. (☞ 2.2.3 Accessory (not supplied))
2	Welding torch	○		
3	Welding torch adapter	○		(*2)
4	Gas hose (3 m)	○		(*3)
5	Water hose (water feed/condensed water set)			(*4)
6	Power cable for base metal side	○		(*3)
7	Shield gas			To be prepared by the customer. (☞ 2.2.3 Accessory (not supplied))
8	Grounding cable			
9	Cooling water circulation device			(*4)
10	Digital remote control (optional)		○	(☞ 2.2.4 Optional accessories)
11	Analog remote control (3 m) (optional)		○	(*3)

*1: Standard component with welding power source. (Supplied when placing order for the welding power source))
*2: This is a component necessary depending on the type of the torch.
*3: Optional extension cable and hose are also available. (☞ 2.2.4 Optional accessories)
*4: This is a component unnecessary when the air-cooled torch is used.

2.2.1.1 Welding torch

A welding torch that matches the welding power source is prepared as a standard component. Refer to each instruction manual for details.

2.2.2 Accessory (supplied)

The section explains the accessories for the welding power source. Check for the warranty, instruction manual (this publication), and the quantity of parts when opening the package.

Item name	Part No.	Q'ty	Remarks
Cable connector		1	For STICK welding
Guide plate	NK9571	1	

2.2.3 Accessory (not supplied)

This section explains the accessories to be prepared by the customer before operating the welding power source.
Prepare the following:

- Gas regulator

  For the gas regulator, make sure to use a device for compressed gas cylinder that conforms to the specific application of the shield gas.

- Shield gas

  Use a shield gas suitable to the welding method.

- Cooling water circulation device

  In using the water-cooled welding torch, prepare a cooling water circulation device.

- Filler wire

  Generally, welding rods of 1.0 to 5.0 mm wire diameter and 1 m in length are packed as a 5 kg package and sold in 10 kg units on the material basis.

- Welding electrode holder

  For STICK welding, prepare a welding electrode holder, welding holder cable, and a welding electrode.

2.2.4 Optional accessories

This section explains the optional accessories used with the welding power source.

2.2.4.1 Remote controls

Following items are optionally available including remote controls.

Product name	Part No. (Model)	Remarks
Analog remote control	K5023L00	Includes 3 m cable
Digital remote control	E-2452	CAN communication cable and BKCAN conversion connector are separately required.
CAN communication cable	BKCAN-0405	5 m
	BKCAN-0410	10 m
BKCAN conversion connector	K5810B00	
Foot-operated current controller	K1104F00	
Foot switch	4259-004	Includes 5 m cable
Torch switch (Push-button type)	K509B00	Includes 4 m cable
Torch switch (Push-button type)	K509C00	Includes 8 m cable
CAN communication module	K5422C00	Used when the filler control device is used.
PC welding monitor	K7231	
Digital interface	E-2503	(*1)
Data storage	E-2560	
Voltage reducing device	K-300	Separately, a mounting bracket (K970J77) and a cable (base metal side) (BKPDT-60R1) are required.

*1: Update of software version is required. For details, contact your dealer.

2.2.4.2 Welding torch

Model		AWD-17	AWD-26	AWD-18
Rated current	DC	150 A	200 A	350 A
	AC	130 A	160 A	270 A
Cooling method		Air-cooled	Air-cooled	Water-cooled
Rated duty cycle		50 %	50 %	100 %
Applied electrode diameter		0.5 to 2.4 mmΦ	0.5 to 4.0 mmΦ	0.5 to 4.0 mmΦ
Cable length		4 m or 8 m	4 m or 8 m	4 m or 8 m

When used with one of the torches on the table below, the corresponding adapter is necessary.

Torch type	Torch adapter type	Adapter to be connected
AW-4,5,9	BBAWD-1701	P1600N02
AW-17	BBAWD-1701	Unnecessary
AW-26	BBAWD-2601	Unnecessary
AW-18	BBAWD-1801	Unnecessary

2.2.4.3 Details of cables and hoses

Following extension cables and hoses are available for option.
For extending the working radius, use extension cable and hose according to the working radius.

⚠ CAUTION

- **When using extension cables, roll them out.**
  Winded extension cable may cause an unstable arc.
- **Use extension cables with suitable length.**
  Unnecessarily long extension cable may cause an unstable arc.

- Power cable (base metal side)

Item name	Type				
	3 m	5 m	10 m	15 m	20 m
Power cable (base metal side)	BKPDT-3803	BKPDT-3807	BKPDT-3812	BKPDT-3817	BKPDT-3822

- Extension cables, hoses, etc. (for torch)

Item name		Part No.	Q'ty	Remarks
BAWE-1504 Part for extending the cable length (4 m) of AW (P)-17 torch to 8 m	Extension torch cable	H954B00	1	4 m
	Torch switch control cable (2-core)	P1043S00	1	4 m
	Adapter	P1600N02	1	
	Connection cover	H558M01	1	
BAWE-1511 Part for extending the cable length (4 m) of AW (P)-17 torch to 15 m	Extension torch cable	H955B00	1	11 m
	Torch switch control cable (2-core)	K527K00	1	11 m
	Adapter and connection cover are the same as BAWE-1504.			
BAWE-1516 Part for extending the cable length (4 m) of AW (P)-17 torch to 20 m	Extension torch cable	H956B00	1	16 m
	Torch switch control cable (2-core)	K527L00	1	16 m
	Adapter and connection cover are the same as BAWE-1504.			
BAWE-2004 Part for extending the cable length (4 m) of AWD-26 or AW-26 torch to 8 m	Extension torch cable	P1043R00	1	4 m
	Torch switch control cable (2-core)	P1043S00	1	4 m
	Connection cover	H558M01	1	
BAWE-2011 Part for extending the cable length (4 m) of AWD-26 or AW-26 torch to 15 m	Extension torch cable	H958B00	1	11 m
	Torch switch control cable (2-core)	K527K00	1	11 m
	Connection cover	H558M01	1	
BAWE-2016 Part for extending the cable length (4 m) of AWD-26 or AW-26 torch to 20 m	Extension torch cable	H959B00	1	16 m
	Torch switch control cable (2-core)	K527L00	1	16 m
	Connection cover	H558M01	1	
BAWE-3004 Part for extending the cable length (4 m) of AW-18 torch to 8 m	Extension gas hose	P1043K00	1	4 m
	Extension water hose (water supply)	P1043L00	1	4 m
	Extension torch cable	H593H00	1	4 m
	Torch switch control cable (2-core)	P1043S00	1	4 m
	Connection cover	H558M01	1	
BAWE-3011 Part for extending the cable length (4 m) of AWD-18 or AW-18 torch to 15 m	Extension gas hose	K527B00	1	11 m
	Extension water hose (water supply)	K527D00	1	11 m
	Extension torch cable	H593J00	1	11 m
	Torch switch control cable (2-core)	K527K00	1	11 m
	Connection cover	H558M01	1	
BAWE-3016 Part for extending the cable length (4 m) of AWD-18 or AW-18 torch to 20 m	Extension gas hose	K527C00	1	16 m
	Extension water hose (water supply)	K527E00	1	16 m
	Extension torch cable	H593K00	1	16 m
	Torch switch control cable (2-core)	K527L00	1	16 m
	Connection cover	H558M01	1	

- Extension cable (remote control)

Item name		Part No.	Q'ty	Remarks
BKCPJ-0404	Extension remote control cable (4-core)	P1043R00	1	4 m
BKCPJ-0411	Extension remote control cable (4-core)	K527H00	1	11 m
BKCPJ-0416	Extension remote control cable (4-core)	K527J00	1	16 m

- Connection method to use by extending torch cable
  - For water-cooled torch:
    Connect the hoses and cables of the optional accessories as follows.
    * Be careful not to connect the water supply hose and the condensate hose oppositely.

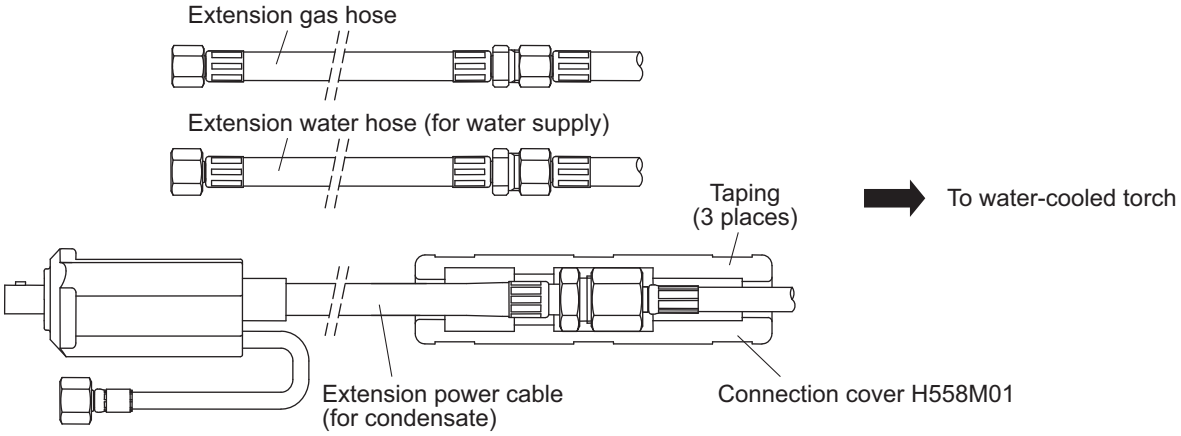

  - For air-cooled torch:

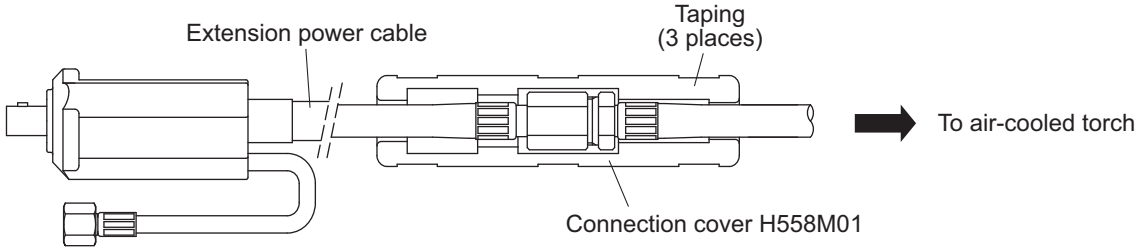

2.2.4.4 TIG filler

- **Control unit**

Type	HC-71D
Input voltage (number of phases)	200/220 V±10 % (single phase)
Rated frequency	50/60 Hz common

- **Wire guide**

Type	Applicable welding torch
BHCD-7117	AW(D)-17
BHCD-7118	AW(D)-18
BHCD-7126	AW(D)-26
K1588	AWP-9, AWP-17

- **CM-7471 wire feeder/CM-7472 wire feeder**
  *** A CAN communication module and CAN communication cables are necessary, separately.**

2.2.4.5 Tungsten electrode

Use the tungsten electrode with 2% ceria (marked in gray) or the tungsten electrode with 2% lantana (marked in yellow). For AC TIG welding, the pure tungsten electrode (marked in green) can also be used. Select the diameter of the electrode depending on the welding current, referring to the table below.

- **Tungsten electrode with 2% ceria**

Part No.	Electrode dimension (mm)		Maximum allowable current (A)	
	Diameter	Length	DC (positive polarity)	AC
0870-005	0.5	150	20	50
0870-010	1.0	150	80	80
0870-016	1.6	150	150	130
0870-020	2.0	150	200	180
0870-024	2.4	150	250	220
0870-030	3.0	150	350	260
0870-032	3.2	150	400	290
0870-040	4.0	150	500	360
0870-048	4.8	150	670	450
0870-064	6.4	150	950	550
0870-316	1.6	75	150	130
0870-324	2.4	75	250	220
0870-332	3.2	75	400	290

- **Tungsten electrode with 2% lantana**

Part No.	Electrode dimension (mm)		Maximum allowable current (A)	
	Diameter	Length	DC (positive polarity)	AC
0850-005	0.5	150	20	50
0850-010	1.0	150	80	80
0850-016	1.6	150	150	130
0850-020	2.0	150	200	180
0850-024	2.4	150	250	220
0850-030	3.0	150	350	260
0850-032	3.2	150	400	290
0850-040	4.0	150	500	360
0850-048	4.8	150	670	450
0850-064	6.4	150	950	550

- **Pure tungsten electrode**

Part No.	Electrode dimension (mm)		Maximum allowable current (A)
	Diameter	Length	AC
0830-005	0.5	150	30
0830-010	1.0	150	60
0830-016	1.6	150	100
0830-020	2.0	150	130
0830-024	2.4	150	160
0830-030	3.0	150	190
0830-032	3.2	150	210
0830-040	4.0	150	270
0830-048	4.8	150	350
0830-064	6.4	150	450

2.2.4.6 Dedicated connector (base metal side)

Use this connector to connect the cable (base metal side) and the cable (STICK welding holder side) with the welding power source.

Type	Part No.	Applicable cable diameter	Rated current
DIXSKK50/70	4734-025	50 to 70 mm^2	400 A
DIXSKK70/95	4734-026	70 to 95 mm^2	500 A

2.3 Part Names

This section explains the part names of the welding power source.

2.3.1 Front panel

The section explains the front section of the welding power source.

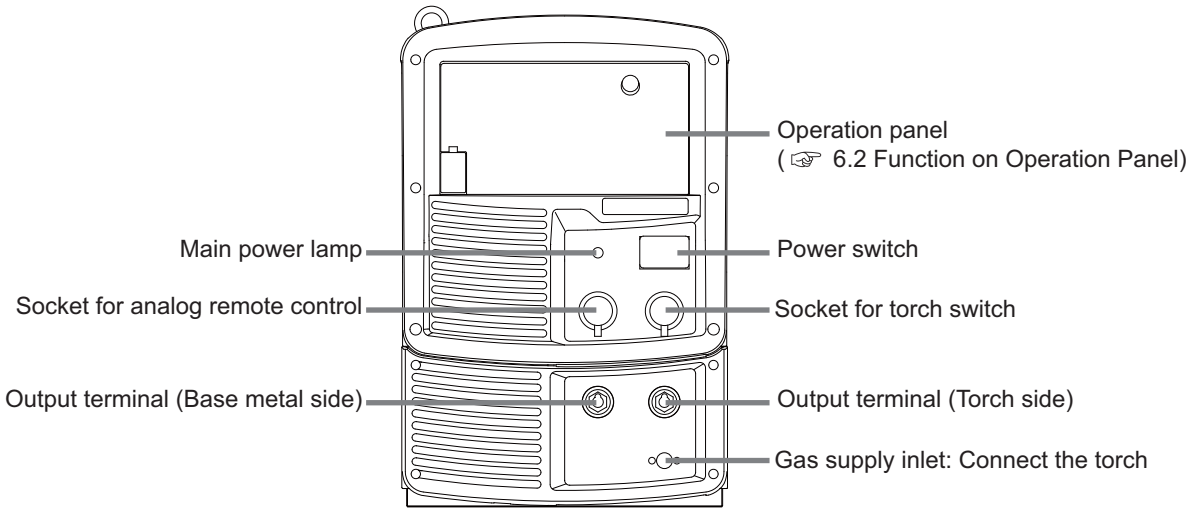

2.3.2 Rear panel

The section explains the rear section of the welding power source.

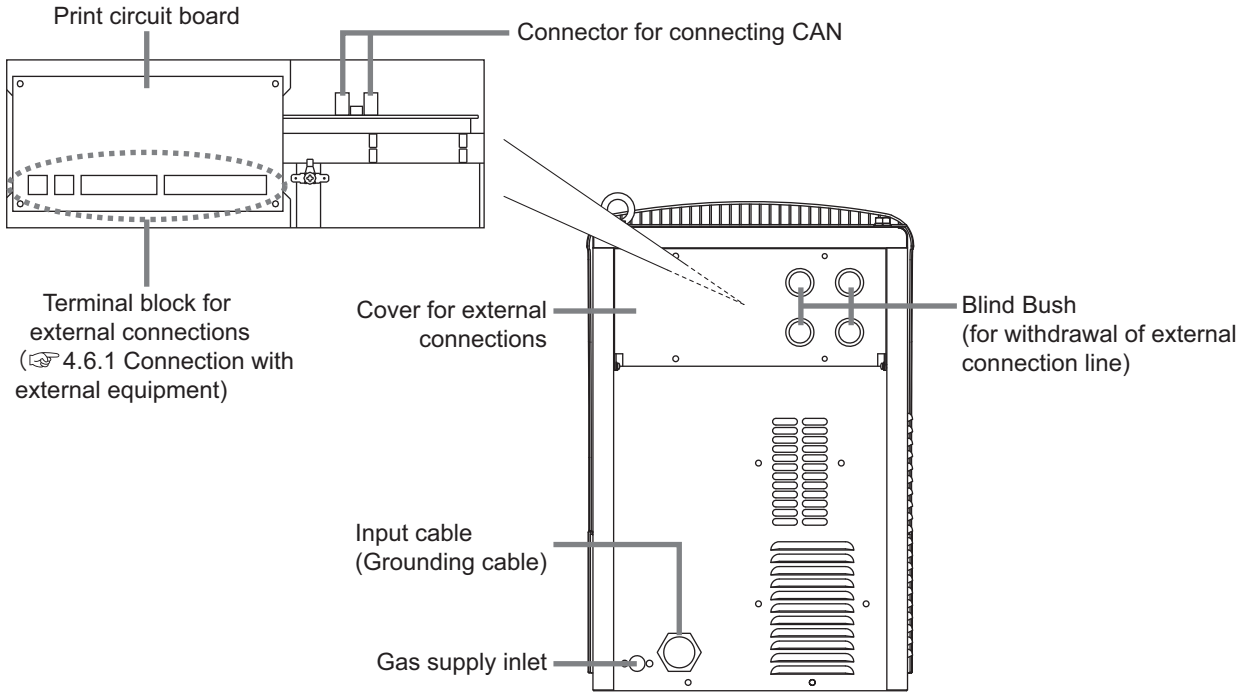

Chapter 3 Transportation and Installation

This chapter explains the necessary equipment, installation environment and transportation method for installing the welding power source.

3.1 Required Equipment

This section explains the necessary power supply equipment for installing the welding power source and equipment for preventing lack of oxygen and dust hazard during welding.

3.1.1 Welding power source equipment

For installing the welding power source, power source equipment and protective device that meet the following ratings are required.

⚠ WARNING

- **When the welding power source is used in a humid environment such as construction site, or location with highly conducting material such as steel plate or on steel structure, install a leakage breaker.**
  Otherwise, electric shock due to leakage of electricity may occur.
- **Be sure to install a switch with fuse or a circuit breaker (for motor) to the input side of each welding power source.**
  Otherwise, electric shock and fire due to overcurrent or damage to the welding power source may occur.

Equipment		Rating
Welding power source equipment	Supply voltage	400 V ± 15% (three phases)
	Installed capacity	16 kVA or more
Protective device	Switch with fuse	Switch capacity: 20 A or more Fuse: 20 A
	No-fuse breaker (or leakage breaker) (*1)	20 A

*1: High sensitivity type leakage breaker is recommended for installing a leakage breaker. (Consult the breaker manufacturer for details)

3.1.1.1 Use of the engine generator and auxiliary power

⚠ CAUTION

- **To prevent the welding power source from being damaged or arc loss, follow the instructions below.**

When using an engine generator for the welding power source, pay attention to the following.

- Set the output voltage of the engine generator to the voltage range between 400 and 420 V at no-load welding operation.
  Setting to an extremely high output voltage may result in damage to the welding power source.
- Use an engine generator with a damper winding that has a capacity of more than twice the rated input (kVA) of the welding power source.
  Generally, the recovery time of the engine generator's voltage for load change is slower than that of the commercial power source. If the engine generator does not have sufficient capacity, sudden current change such as arc start will occur and this may result in an abnormal decrease in output current or arc loss.
- Be sure to use a single welding power source with a single engine generator. If more than two welding power sources are combined, output voltage will become unstable with a likely result of arc loss.

Use the auxiliary power of engine welder with an improved voltage waveform.
Some engine welders have poor electricity that may cause product damage on the welding power source.

3.1.2 Ventilation equipment/partial exhaust facility

This section explains the ventilation equipment and partial exhaust facility in welding work area.

3.1.2.1 Ventilation equipment

When welding is required in tank, boiler, reaction tower, or hold of a ship, closed space, or any other places of poor ventilation, ensure to provide ventilation equipment.
Condition of ventilation equipment:
Oxygen concentration of 18 % or more must be maintained in the welding work area.

⚠ WARNING

- **Gas of larger gravity than that of oxygen, such as carbon dioxide gas or argon gas, retains at the bottom part.**
  To prevent anoxia due to the retention gas, provide ventilation equipment.
- **When it is difficult to provide ventilation equipment or the ventilation equipment does not give sufficient performance, ensure to use respiratory protective equipment.**
- **Periodically inspect the ventilation equipment to ensure correct and proper performance of ventilation.**

3.1.2.2 Partial exhaust facility

To prevent any health damage due to poisonous gas or particle substances (fume) emitted in the welding operation, provide partial exhaust facility.

⚠ WARNING

- **When it is difficult to provide a partial exhaust facility or the ventilation or exhaust facility does not give sufficient performance, ensure to use the respiratory protective equipment.**
  The respiratory protective equipment of higher protection efficiency with an electric fan is recommended. (The 8th Dust Hazard Prevention Integrated Countermeasures)

3.2 Installation Environment

This section explains the installation environment of the welding power source.

⚠ WARNING

- **For prevention from fire or damage to the welding power source, be sure to install in a location that satisfies the following environment:**

3.2.1 Installation environment

- Location with no combustible materials or flammable gas
  If combustible materials cannot be removed, cover them with noncombustible covers.
- Location with no scattering of organic solvent, chemicals, cutting oil, and composition oil or atmosphere containing the above
  Such materials cause crack (breaking) and deterioration in the plastic part.
- Location with no exposure to direct sunlight or rain
- Robust and flat floor surface such as concrete pavement
  Assure sufficient floor face strength to ensure that the weight of welding power source can withstand.
  Face the surface with the eyebolt on upside to prevent from falling.
- Location with an ambient temperature of -10 to 40 ºC
- No condensation at location with an ambient humidity of 50 % or lower (ambient temperature of 40 ºC), and 90 % or lower (ambient temperature of 20 ºC)
- Location with an altitude of less than 1000 m
- Location with an incline of 10º or less
- Location with no metallic foreign body such as spatter entering the welding power source
- Installation distance of 30 cm or more between the welding power source and the wall or other welding power source
  Ensure not to block the ventilation hole.
- Location with no wind on the arc section
  Install a wind shield to protect arc from wind.

3.2.2 Electromagnetic interference

To prevent electromagnetic troubles, read the following. Also, if electromagnetic troubles occur, check the following again.

Before installing arc welding equipment the user shall make an assessment of potential electromagnetic problems in the surrounding area. The following shall be taken into account:

- Other supply cables, control cables, signalling and telephone cables, above, below and adjacent to the arc welding equipment;
- Radio and television transmitters and receivers;
- Computer and other control equipment;
- Safety critical equipment, for example guarding of industrial equipment;
- The health of the people around, for example the use of pacemakers and hearing aids;
- Equipment used for calibration or measurement;
- The user shall ensure that other equipment being used in the environment is compatible;
- The time of day that welding or other activities are to be carried out;

Methods of reducing EMC:

- Public supply system
  Add a noise filter to the input cables.
- Maintenance of the arc welding equipment
  Close and fix all doors and covers of the welding power source.
- Welding cables
  Do not use an unnecessarily long cable.
  Place a base metal cable and a torch side cable as closely as possible.
- Equipotential bonding
  Bonding of all metallic objects in the surrounding area should be considered.
- Earthing of the workpiece
  The connection of the workpiece to earth should be made by a direct connection to the workpiece, but in some countries where direct connection is not permitted, the bonding should be achieved by suitable capacitance, selected according to national regulations.
- Screening and shielding
  It is selective screening and shielding of other cables and equipment in the surrounding area.

3.3 Transportation Procedure

This section explains the procedure for transportation of the welding power source.

⚠ WARNING

- Do not touch the input and output terminals and the internal live electrical parts of the welding power source.
  It may cause electric shock.
- Before starting the work, make sure to cut the input power with the disconnect switch in the box connected to the welding power source and wait three minutes or more. In addition, do not turn on the primary power until the work is complete.
  If work is performed while the input power is on, electric shock may occur.

⚠ CAUTION

- During transportation, be careful not to get the hand, leg or other body part caught between the welding power source and floor.
- Do not apply strong shock to the welding power source when placing it on the floor.
  It may cause damage to the welding power source.

Since large current abruptly flows inside the welding power source during welding, other machine near the welding power source may be failed due to electromagnetic noise. Follow the instructions below:

- Do not ground the welding power source commonly with other machines.
- Close and fix all doors and covers of the welding power source.
- Do not use unnecessarily long cables.
- Place a base metal cable and a torch side cable as closely as possible.

In the event of electromagnetic problems, follow the instructions below:

- Change the installation place of the welding power source.
- Keep the machines which may be affected away as far from the welding power source, cables, and welding site as possible.
- Add a noise filter to the input cables.

3.3.1 Transportation with lifting lug

This section explains the procedure for transportation with lifting lug such as a crane.

⚠ WARNING

For preventing falling of the welding power source and resulting accidents, be sure to observe the following:

- **For operation of a crane or hoisting, make sure that a qualified personnel operate them with attention to the surrounding area for safety.**
- **Use the lifting tool such as wire and shackle suitable for the weight of the welding power source. Hoist according to the specified procedure.**
- **Lift the welding power source alone with two wires using all of the eye bolts.**
- **Do not hoist with tools and other devices placed on the welding power source.**
- **Make sure beforehand that the eye bolts on the surface of welding power source are not loose. Tighten the eye bolts when they are loose.**

STEP

1. **Attach the lifting lug with the eye bolts.**

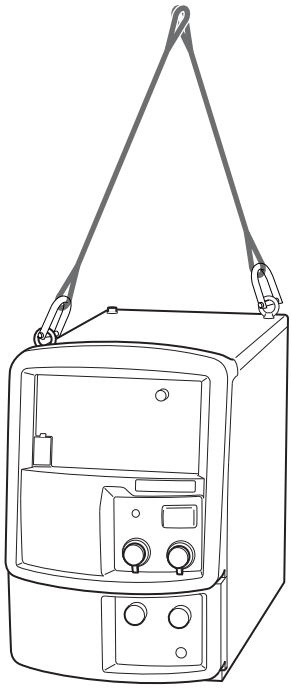

2. **Lift the welding power source carefully paying attention to the balance by using lifting lug.**

Chapter 4 Connection

This chapter explains the procedure for connecting the welding power source.

4.1 Precautions for Connection Procedure and Grounding

This section explains the precautions for connection and grounding procedure. For protection from serious injury or fire, observe the following:

⚠ WARNING

For protection from electric shock, observe the following points:

- **Wear protective equipment such as protective gloves, safety shoes and long-sleeve clothes.**
- **Do not touch the input and output terminals and the internal live electrical parts of the welding power source.**
- **Have a qualified electrical engineer ground the case of the welding power source and base metal or jig electrically connected in accordance with local regulation.**
- **Make sure to cut the input power with the disconnect switch in the box connected to the welding power source. Do not turn on the input power before confirming the completion of connection.**
- **Use a cable with specified thickness. Do not use damaged cable or cable with stripped conductor.**
- **Ensure to tighten and insulate the connection of cables.**
- **Securely attach the case and cover of the welding power source after connecting the cables.**
- **When extending the cable, use only the specified extension cable. Do not extend the cable by connecting the round terminals.**

4.2 Connecting the Welding Power Source

This section explains the procedure for connecting the welding power source. Follow the steps below for connection of the welding power source.

⚠ WARNING

- **Do not turn on the input power of the welding power source until confirming the completion of connection work. Otherwise, electric shock may occur.**

- **TIG welding:**

Connection of cable (base metal side)	(☞ 4.2.1 Connection of cable (base metal side))
↓	
Connection of TIG welding torch	(☞ 4.2.2 Connection of TIG welding torch)
↓	
Connection of shield gas	(☞ 4.2.4 Connection of shield gas)
↓	
Grounding work	(☞ 4.3 Grounding and Connection of Input Power Supply)
↓	
Connection of input power connectors	(☞ 4.3 Grounding and Connection of Input Power Supply)
↓	
Confirmation of connection	(☞ 4.4 Confirmation of Connection)

- **STICK welding:**

Connection of cable (base metal side)	(☞ 4.2.1 Connection of cable (base metal side))
↓	
Connection of STICK welding torch	(☞ 4.2.3 Connection of DC STICK welding torch)
↓	
Grounding work	(☞ 4.3 Grounding and Connection of Input Power Supply)
↓	
Connection of input power connectors	(☞ 4.3 Grounding and Connection of Input Power Supply)
↓	
Confirmation of connection	(☞ 4.4 Confirmation of Connection)

4.2.1 Connection of cable (base metal side)

This section explains the procedures for connecting the base metal side cable.
In order to connect the base metal side cable with the welding power source, a dedicated connector must be installed at the end of the base metal side cable.
For details of the dedicated connector, refer to "2.2.4.6 Dedicated connector (base metal side)".

⚠ WARNING

- **Use a grounding cable for the case, of welding power source and perform grounding. Otherwise, voltage may increase in the case or base metal which could cause electric shock.**

NOTE

- **When using STICK welding holder, STICK welding holder side cable must be attached dedicated connector in the same manner as material side cable.**

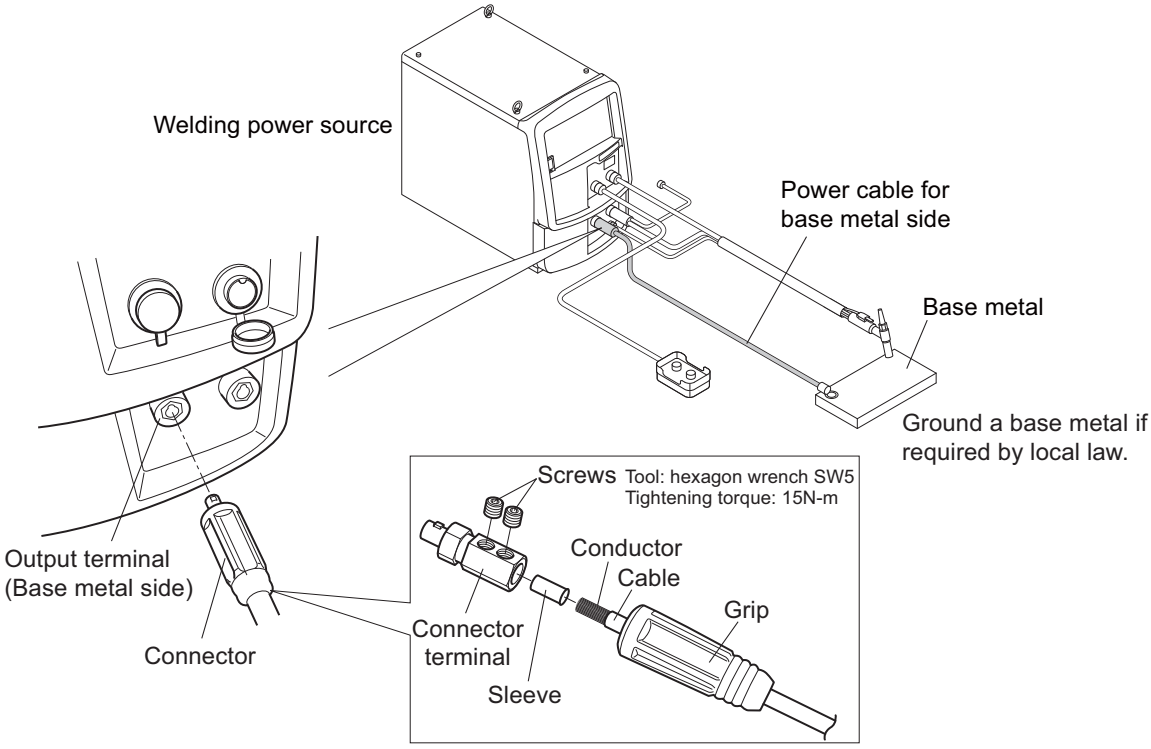

STEP

1. **Thread the cable on the grip.**
   - Strip the conductor portion to almost the same length as the sleeve.
2. **Put the sleeve on the conductor of the cable.**
3. **Fit the sleeve to the connector terminal and secure with the screws.**
   - Tighten the screws by 15 N-m with the hexagon wrench.
4. **Connect the base metal side cable to the output terminal (base metal side) and the base metal.**
   - For the connection on the welding power source side, fit the convex portion of the connector with the concave portion of the output terminal and firmly insert the connector, and then tighten by turning it clockwise.

Connection of the base metal side cable is complete by the operations above.

4.2.2 Connection of TIG welding torch

This section explains the connection procedures for the TIG welding.

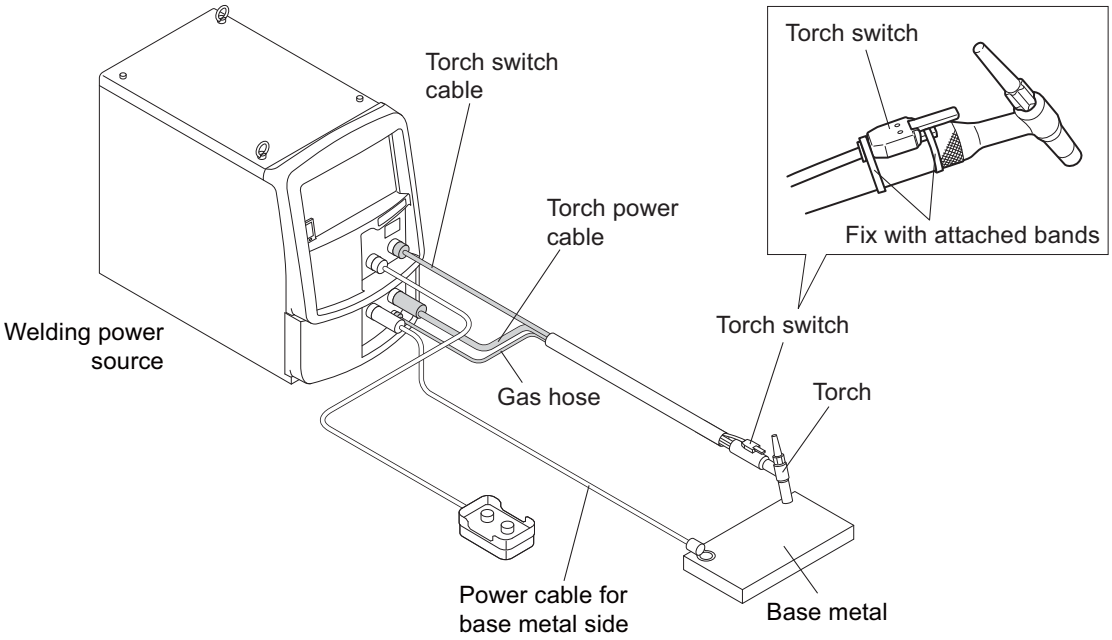

STEP

1. **Connect the torch power cable to the output terminal (torch side).**
   - For the connection on the welding power source side, fit the convex portion of the connector with the concave portion of the output terminal and firmly insert the connector, and then tighten by turning it clockwise.
2. **Connect the gas hose to the gas connection port.**
3. **Remove the cap of the torch switch socket and connect the torch switch cable (2-core) to the socket.**
   - Fit the concave part of the connector and convex part of the socket for secure connection and tighten the knurled screws in the clockwise direction.
   - When using an analog remote control (optional accessory), remove the cap of socket for the analog remote control and insert the control cable (4-core).
4. **Fix the torch switch to the torch.**
   - Overlap the torch switch at the foot of the torch (the handle portion).
   - Roll the torch switch and the handle portion with the attached bands (2 pcs) with its rough surface faced inward.
   - Thread the band tip through the hole and tighten it by hand or with pliers sufficiently and then cut the excess portion of the band.

NOTE

- **If you use a water-cooled torch, connect the water supply hose and the condensate hose with the cooling water circulation system.**

4.2.2.1 Precautions for connections for AC TIG welding

When using the welding power source for AC TIG welding, keep the cable as short as possible. If you really need to use an extension cable, use caution on the following points.

- Bundle both the base metal cable and the torch cable and apply tape on them.
- Straighten the cables as much as possible.
- If you cannot straighten the cables as explained, run the torch cable on the base material.

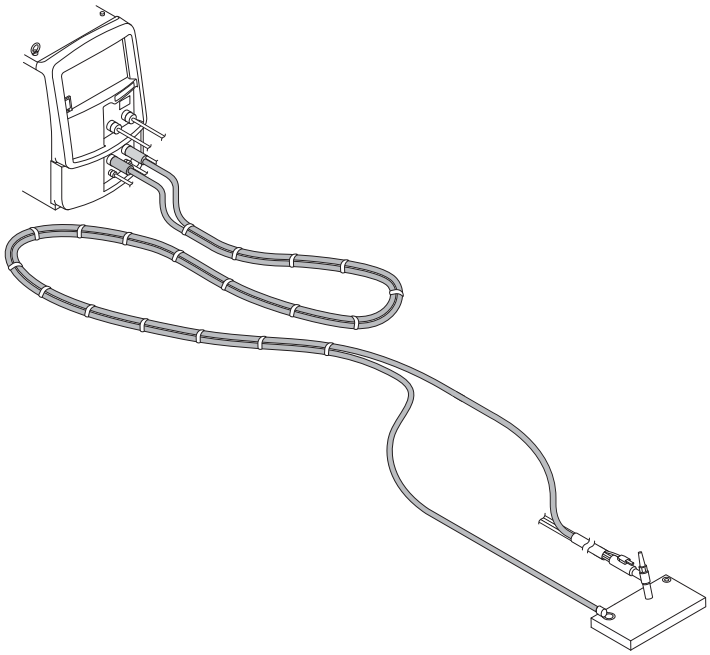

- When using the welding power source with surplus cables wound, wind them referring to the following good example.

[Bad example]

Do not wind all surplus cables in the same direction.

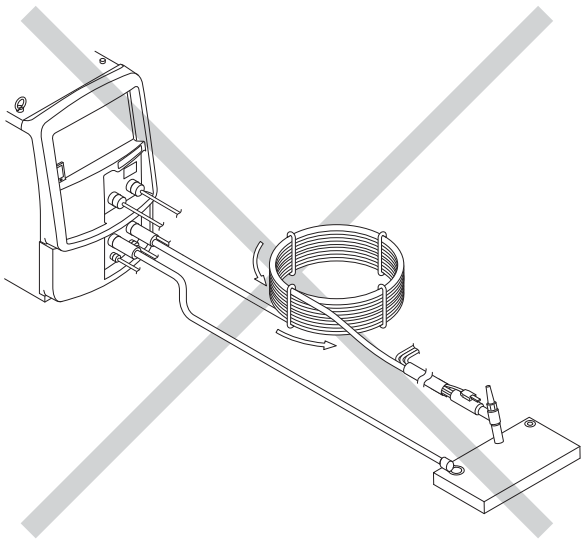

[Good example]

Wind each cable in the opposite direction to make two bundles, and pile them.

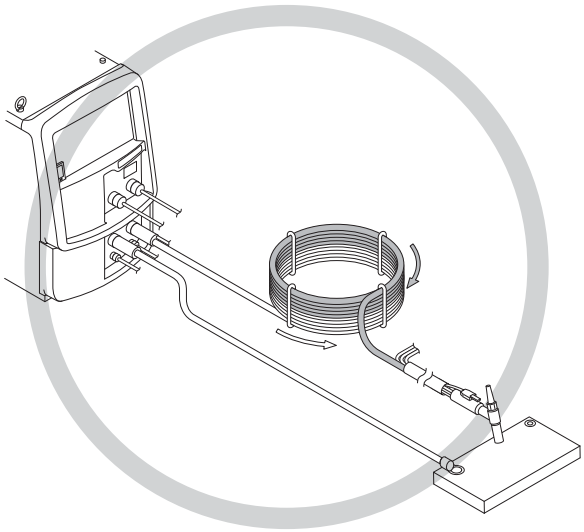

STEP

1. **Divide surplus cables to A and B and wind them in the same manner, times of winding, and diameter.**

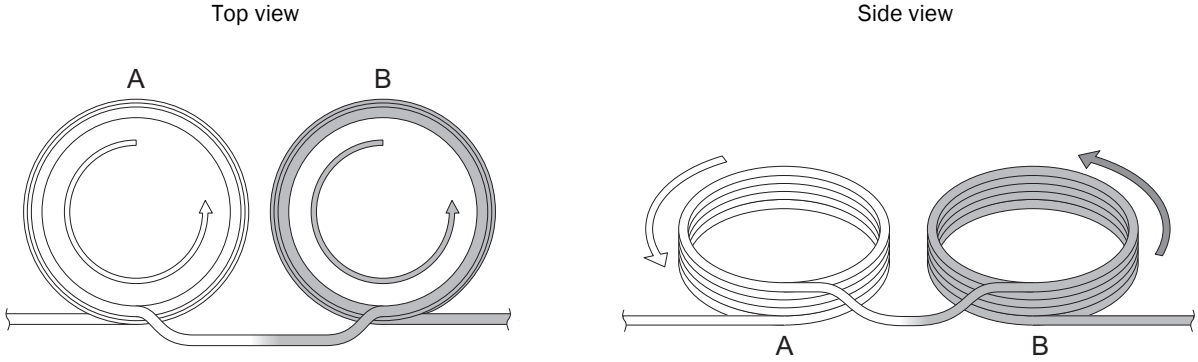

2. **Pile the bundle A on the bundle B.**

- Pile them so that their winding directions are opposite.

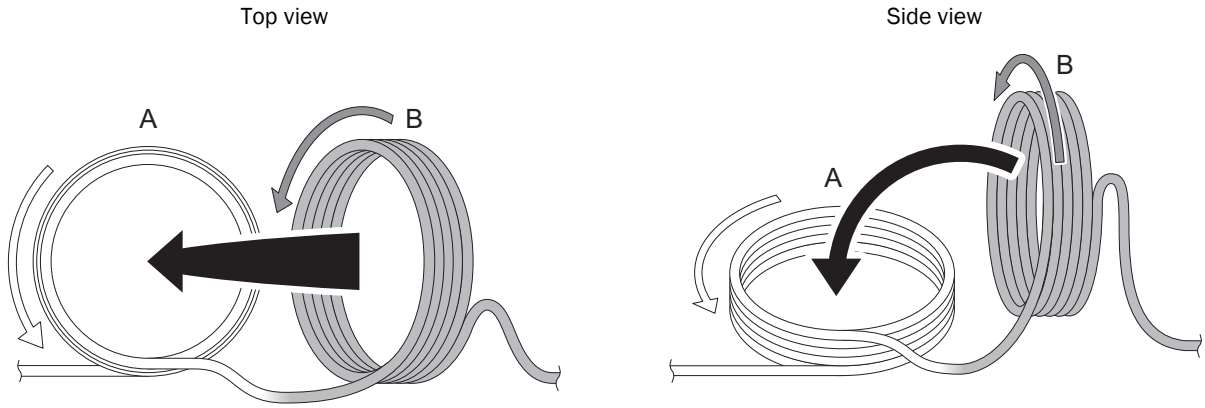

3. **Connect the bundles A and B with a wire or the like so that they do not get loose.**

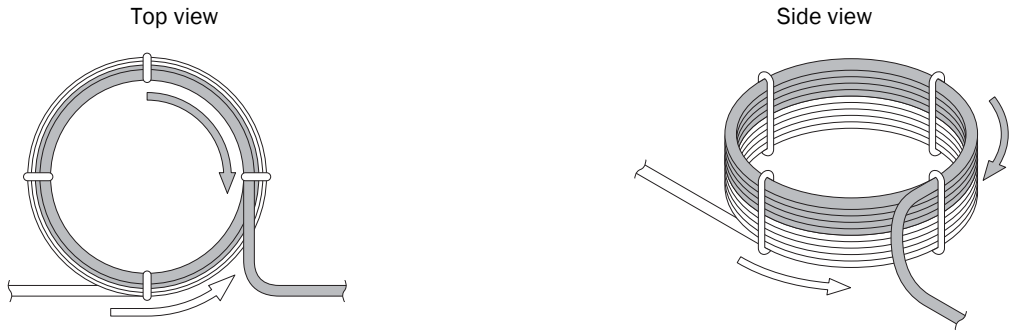

4.2.3 Connection of DC STICK welding torch

This section explains the connection procedures for the STICK welding.
Prepare a welding rod holder. (☞ 2.2.3 Accessory (not supplied))

NOTE

- **A dedicated connector must be installed at the end of the cable on the STICK welding holder side. For details, refer to "4.2.1 Connection of cable (base metal side)".**
- **Since the following is an example of the DC rod plus (Welding rod +, Base metal -) connection, the cable (STICK welding holder side) is connected to the output terminal (base metal side) and the cable (base metal side) is connected to the output terminal (torch side). When used in the DC welding rod minus condition, the output terminals to be connected should be interchanged.**

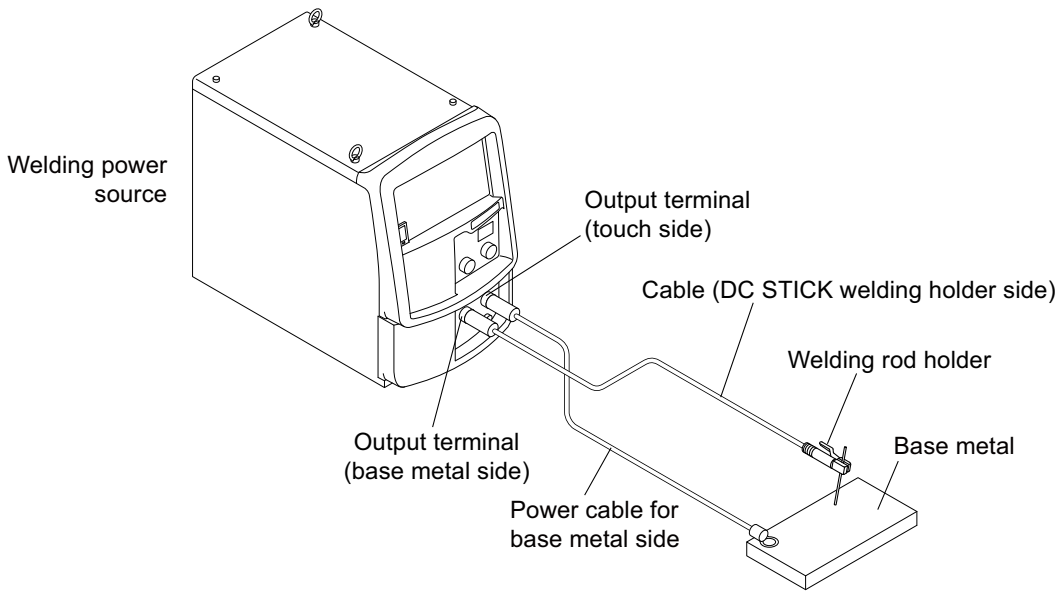

STEP

1. **Install a dedicated connector at the end of the cable (DC STICK welding holder side).**
2. **Connect the cable (DC STICK welding holder side) to the output terminal (base metal side).**

4.2.4 Connection of shield gas

This section explains the procedure for connecting the the shield gas.

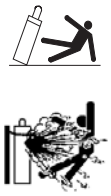

⚠ WARNING

- **Be sure to observe the following points to prevent from suffocation due to gas leakage or explosion.**
  - **Be sure to turn off the shield gas at the main tap when the welding power source is not in use.**
  - **Securely connect the gas hose and attach the gas regulator with a wrench so that there is no gas leakage.**
- **For the gas regulator, make sure to use a device for compressed gas cylinder that conforms to the specific application of the shield gas.**
  Using an inappropriate gas regulator may cause explosion.
- **Keep the cylinder upright and securely chained to a stationary support or a rack.**
  Falling or tipping of cylinder may cause serious injury.

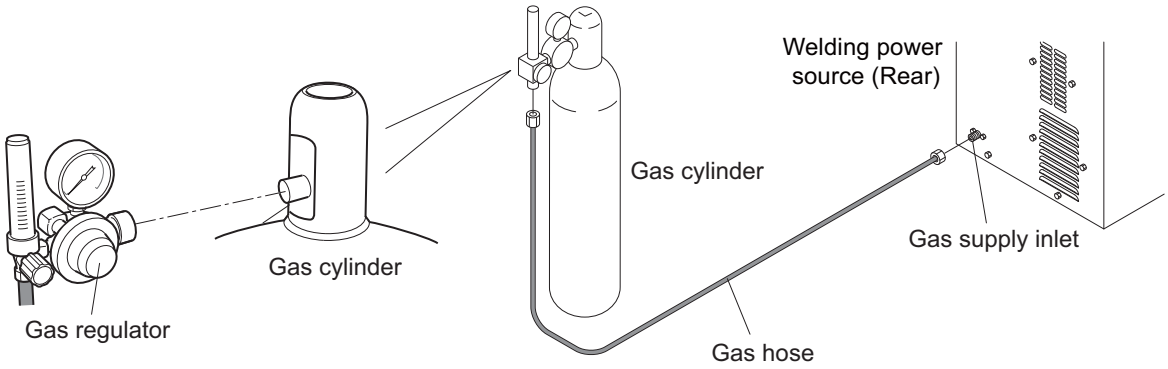

STEP

1. **Attach the gas regulator to the gas cylinder.**
2. **Connect the gas hose to the gas regulator and the welding power source.**

Connection for shield gas is complete.
In using the air-cooled welding torch, continue to perform the step described in "4.3 Grounding and Connection of Input Power Supply".

4.3 Grounding and Connection of Input Power Supply

This section explains the procedure for performing grounding work, connecting the welding power source and input power supply (power supply at facility side).

⚠ WARNING

- **When the welding power source is used in a humid environment such as construction site, or location with highly conducting material such as steel plate or on steel structure, install a leakage breaker.**
  Otherwise, electric shock due to leakage of electricity may occur.
- **Be sure to install a switch with fuse or a circuit breaker (for motor) to the input side of each welding power source.**
  Otherwise, electric shock and fire due to overcurrent or damage to the welding power source may occur.
- **If the welding power source which is not grounded is used, voltage will be generated in the case through the capacitor between the welding power source input circuit and the case or floating capacity (electrostatic capacity naturally generated between the input conductor and the case metal). If you touch the case, you may suffer from electric shock. Be sure to ground the case of the welding power source.**
- **Be sure to connect the input cable (3 pcs) in the correct position and securely tighten them to the terminal block.**
  Improper connection may cause electric shock, fire and damage to the welding power source.

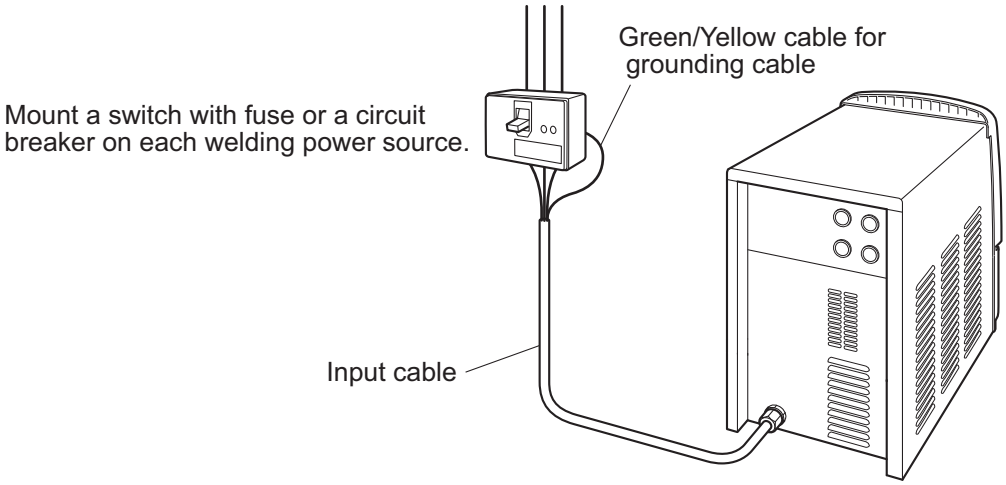

STEP

1. **Check that input power is turned off with the disconnect switch connected to the welding power source.**
2. **Perform grounding work for welding power source.**
   - Grounding cable : AWG10 (5.3 mm^2) with 10 mmΦ terminal × 1
   - ⇒ The grounding cable is a striped pattern in yellow and green.
3. **Connect the power cables (3 pcs) to the output terminals of power source at facility side.**
   - Input cable : AWG10 (5.3 mm^2) with 10 mmΦ terminal × 3

Grounding and connection of input power supply is complete. Procedure is followed by “4.4 Confirmation of Connection”.

4.4 Confirmation of Connection

This section explains the point of confirmation after completing all of the connections. Check for the following after the connection is complete.

- No looseness in the cable connections
  If looseness is found, tighten it to secure the connection.
- No cable of other equipment is connected to the breaker to which input cable of the welding power source is connected.
  Connect only the cable of the welding power source to the breaker.
- Capacity of the disconnect switch and the rating of fuse and circuit breaker are appropriate. (☞ 3.1.1 Welding power source equipment)
- Perform grounding for the case of the welding power source.
  Ground terminal is properly grounded when grounding cable of the welding power source is connected to the breaker's ground terminal.
- No tools or equipments are left placed on the surface of the welding power source.
  Do not place any material on the surface of the welding power source.

4.5 Connection of Voltage Reducing Device

4.5.1 Installation to welding power source

This section explains the procedure for installing the voltage reducing device to the welding power source.

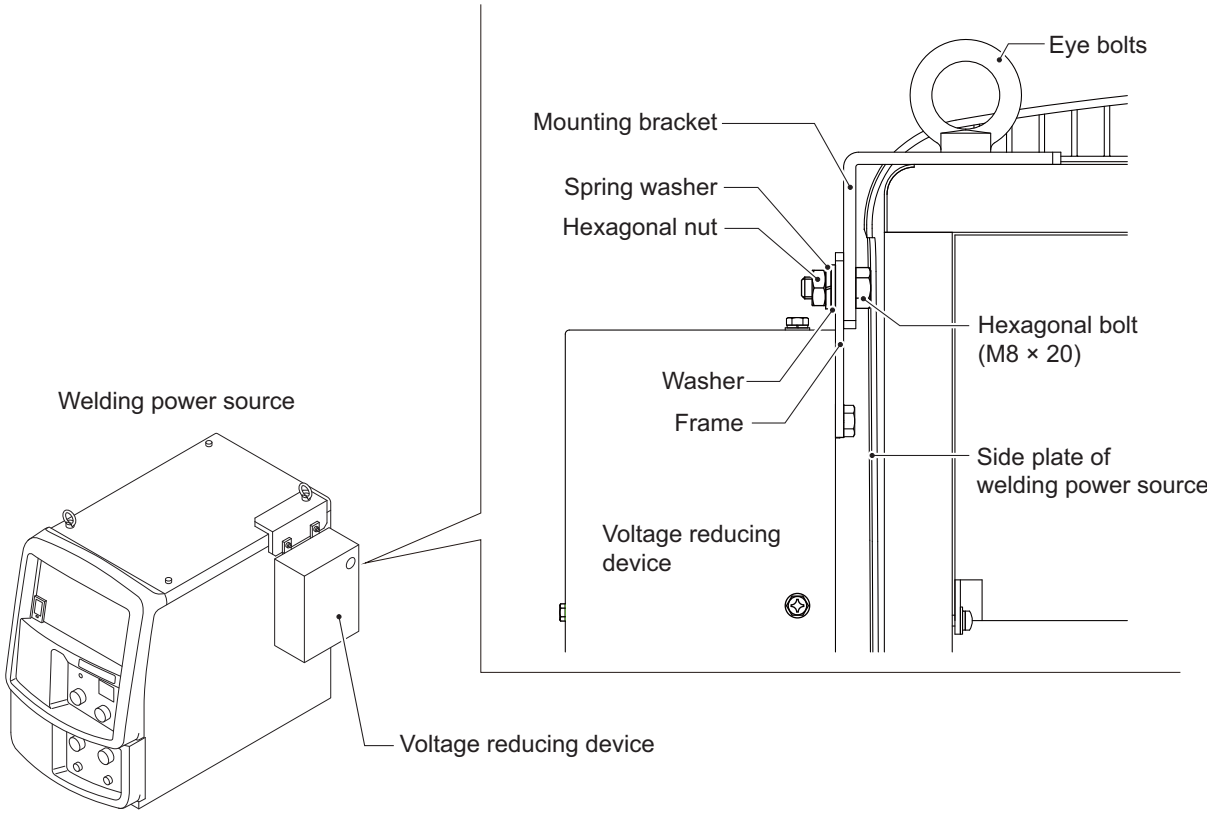

STEP

1. **Attach the mounting bracket (K970J77) to the frame of the voltage reducing device.**
   - Fit the bracket to the frame, and fix it with a hexagonal bolt (M8 x 20), a washer, a spring washer, and a hexagonal nut.
2. **Install the voltage reducing device to the right side plate of the welding power source.**
   - Mate the bracket to the eye bolt or hexagonal bolt of the top plate of the welding power source and tighten the bolt.

Installation of the voltage reducing device is now complete. Next, proceed to “4.5.2 Connection of output cable”.

4.5.2 Connection of output cable

This section explains the procedure for connecting the output cable.

NOTE

- **The welding rod holder, the cable (welding rod holder side), and the cable (base metal side) must be prepared by the customer.**

TIPS

- **For the connections of the base metal and the cable (welding rod holder side) of the welding power source, refer to "4.2.3 Connection of DC STICK welding torch".**

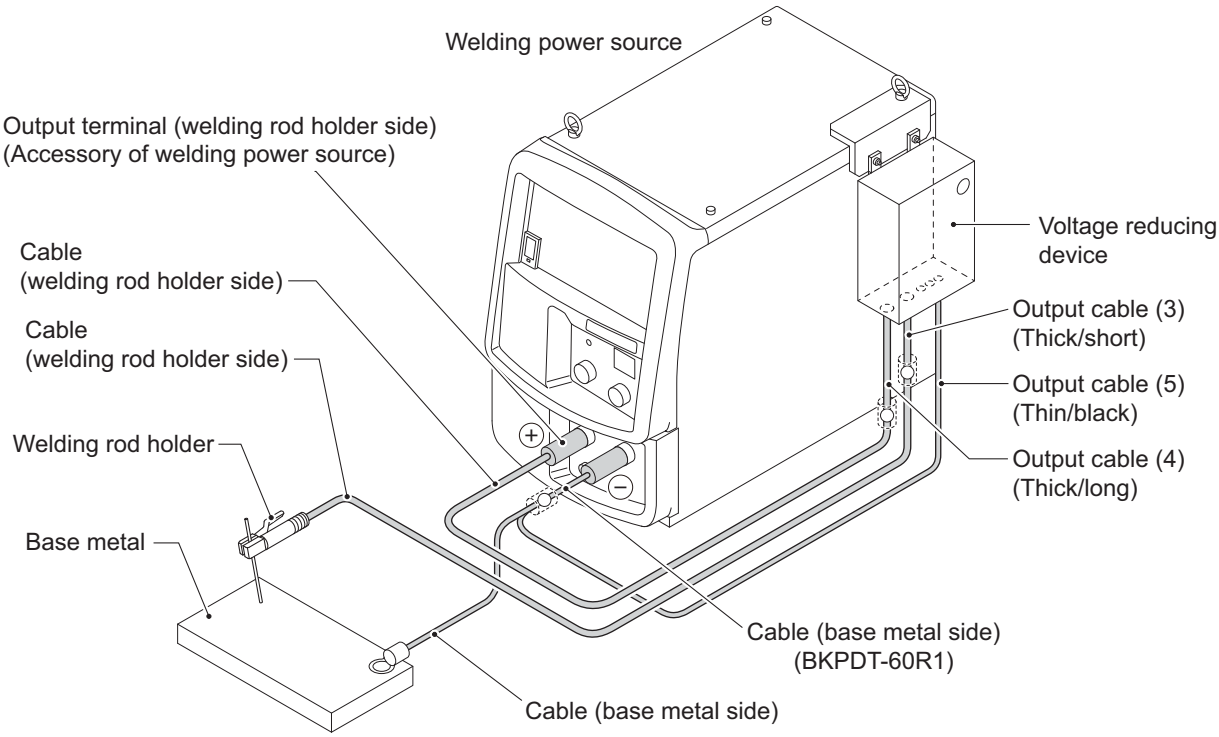

STEP

1. **Connect the output cable (4) to the output terminal "+" of the welding power source and securely tighten it.**
   - Connect the longest output cable out of the three output cables.
2. **Insulate the connection between the output cable (4) and the output terminal securely with an insulation tape or the like.**
3. **Connect the output cable (5) to the output terminal "-" of the welding power source and securely tighten it.**
4. **Insulate the connection between the output cable (5) and the output terminal securely with an insulation tape or the like.**
5. **Connect the output cable (3) to the terminal of the cable (welding rod holder side) and securely tighten it.**
6. **Insulate the connection between the output cable (3) and the terminal securely with an insulation tape or the like.**

Connection for output cable is complete. Procedure is followed by “4.5.3 Grounding and Connection of Input Cable”.

4.5.3 Grounding and Connection of Input Cable

This section explains the procedure for performing grounding work and input cable.

⚠ WARNING

- When voltage reducing device and the welding power source are used in a humid environment such as construction site, or location with highly conducting material such as steel plate or on steel structure, install a leakage breaker.
  Otherwise, electric shock due to leakage of electricity may occur.
- Be sure to install a switch with fuse or a circuit breaker (for motor) to the input side of each welding power source. If this is not observed, an electric shock and a fire due to overcurrent or damage to the voltage reducing device and welding power source may occur.
- Ground the case of the voltage reducing device using a grounding cable with a thickness of 2 mm^2 or more. Voltage may be generated in the case or base metal, which may cause an electric shock.
- Be sure to connect the input cables and output cables (2 cables for each) in the correct positions and securely tighten them to the corresponding terminal block.
  Improper connections may cause an electric shock, a fire and damage to the voltage reducing device and welding power source.

TIPS

- For grounding and connection of the input power supply of the welding power source, refer to the instruction manual of the welding power source.

STEP

1. Check that the input power cable of the welding power source is disconnected from the disconnect switch of the distribution box.
2. Connect a grounding cable to the grounding terminal of the welding power source and securely tighten it.
3. Connect the input cable of the welding power source and the input cable of the voltage reducing device to the input terminal of the welding power source together and tighten them securely.
4. Connect the input power cable of the welding power source to the disconnect switch of the distribution box.

Grounding and connection of input cable is complete. Procedure is followed by ”4.4 Confirmation of Connection”.

4.6 Connection of External Equipment

This section explains the method for connecting the welding power source with robots and automatic machines.

4.6.1 Connection with external equipment

This section explains the procedure for connection of automatic machine with the welding power source.

4.6.1.1 Wiring for connecting external equipment

The welding power source is equipped with terminal block for external connection inside the cover for external connection at the rear. When connecting to the automatic machine, use this terminal block for external connection.

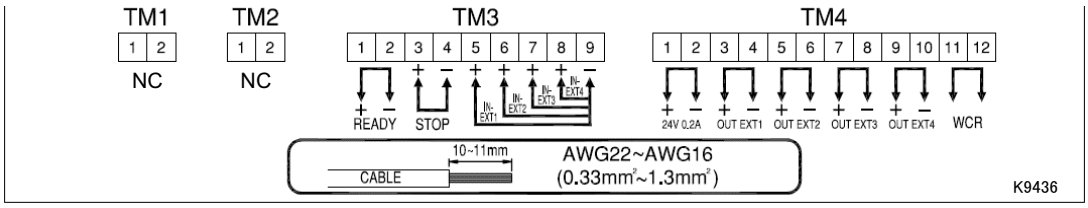

Terminal No.		Signal name		Function
TM1				Unused
TM2				Unused
TM3	1-2	READY	Power ready output	When the welding power source side is ready to start welding, the contact between the terminals closes. When an error is detected, the contact opens.
	3-4	STOP	Operation stop input	Disconnecting the terminals stops output of the welding power source. When combining switches, use a push-lock, turn-reset switch for preventing accidental reset.
	5-9	IN-EXT1	External input 1	Reserve inputs for expanding terminal functions. By setting the internal functions (Functions), the welding power source can output the signal to the external equipment. (☞ 6.10 Setting Internal Functions)
	6-9	IN-EXT2	External input 2	
	7-9	IN-EXT3	External input 3	
	8-9	IN-EXT4	External input 4	
TM4	1-2	24 V 0.2 A	24 V power source	Outputs power supply of 24 V. Current capacity: 0.2 A (Maximum)
	3-4	OUT EXT1	External output 1	Reserve outputs for expanding terminal functions. By setting the internal functions (Functions), the welding power source can output the signal to the external equipment. (☞ 6.10 Setting Internal Functions)
	5-6	OUT EXT2	External output 2	
	7-8	OUT EXT3	External output 3	
	9-10	OUT EXT4	External output 4	
	11-12	WCR	WCR output	When welding current is detected, the contact between the terminals closes.

- <u>Input signal of the external connection terminal block</u>
  Use switches and relays with contact capacity of 24 V/10 mA or more for connecting with the input terminal.
  It is recommended to use a resistor of approx. 10Ω since the noise reduction capacitor is mounted in the welding power source.

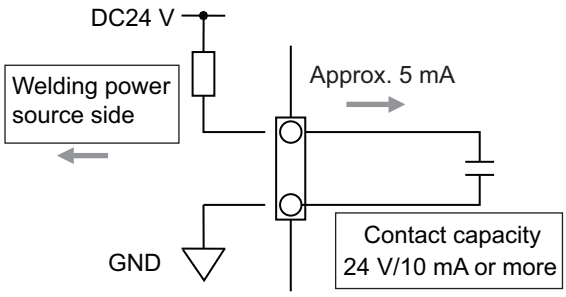

- Output signal of the external connection terminal block
  Output signal is open collector output. Ensure to keep the maximum rated power of the transistor.

  Maximum rated power of transistor
  READY: DC50 V/100 mA
  OUT EXT1 to 4: DC50 V/100 mA

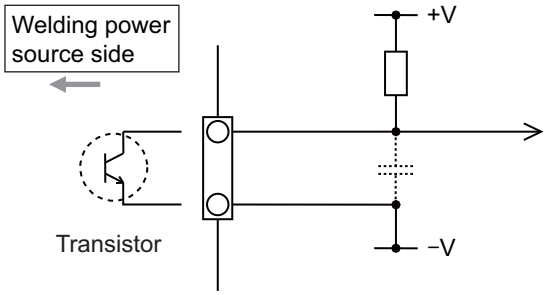

- WCR output signal
  WCR signal is the output of relay contact. Ensure to keep the maximum rated power of the contact.

  Maximum rated power of relay contact
  WCR: A resistance load of 125 Vac 0.5 A, 30 Vdc 1 A Use at 80% of the rating as the standard.

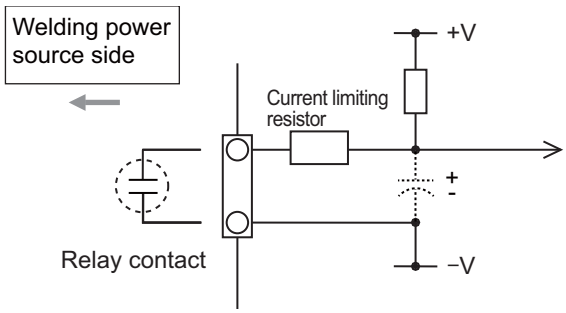

NOTE

- **Connect by confirming the instruction manual of the device to be connected. Add a current-limiting resistor when a capacitor is connected at the connection destination of the contact.**

4.6.1.2 Connection of terminal for external connection

This section explains the procedure for connection to the terminal for external connection.

⚠ WARNING

To prevent electric shock, ensure to follow the instructions below:

- **Wiring should be performed by qualified persons or persons familiar with the welding machine.**
- **Do not touch the input and output terminals and the internal live electrical parts of the welding power source.**
- **Before starting the work, make sure to cut the input power with the disconnect switch connected to the welding power source and wait three minutes or more. In addition, do not turn on the primary power until the work is complete.**
- **Do not use damaged cable or cable without grounding.**
- **Securely attach the case and cover of the welding power source after connecting the cables.**

Use the following cable for connecting to the terminal for external connection:

- **Cable thickness: AWG22 to AWG16 (0.33 to 1.3 mm²)**
- **Using a cable or terminal not specified will be a cause of heat generation and fire. Furthermore, cable other than specified cannot be connected to the terminal for external connection.**

⚠ CAUTION

- **The control cable drawn out from the terminal for external connection should be kept away from the welding power cable or the torch cable as much as possible. Otherwise, failure may occur due to noise during use.**
- **Do not pull out the cables other than the cable that is connected with the terminal block on the printed circuit board. Malfunction or error may occur.**

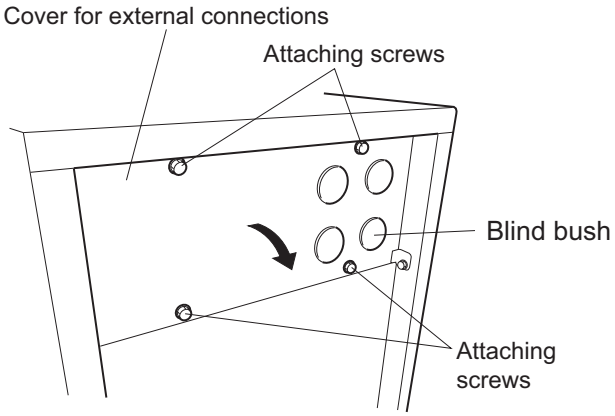

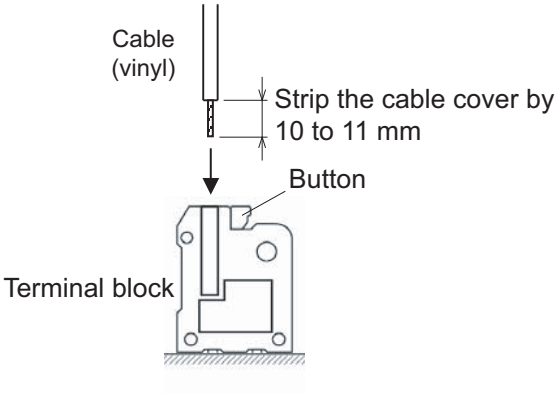

STEP

1. **Check that input power is turned off with the disconnect switch connected to the welding power source.**
2. **Remove the attaching screws and open the cover for external connection.**
3. **Remove the blind bush and pass the cable.**
   - Remove one of the plural blind bushes.
4. **Connect the cable to the terminal for external connection.**
   - Strip the cable cover by 10 to 11 mm from the end while pressing the button on the terminal block and insert the cable.
5. **Check the wiring and place the cover for external connection back to the welding power source.**

Chapter 5 Welding Operation

This chapter explains the procedures from preparation to completion of the welding operation.

5.1 Precaution at Welding Operation

This section explains the safety precautions for welding operation.

5.1.1 Precautions for air discharge and use of respiratory protective equipment

To prevent suffocation or gas poisoning in the welding operation, ensure to follow the instructions below:

⚠ WARNING

- **When welding is required in tank, boiler, reaction tower, or hold of a ship, closed space, or any other places of poor ventilation, ensure to provide ventilation equipment.**
- **Gas of larger gravity than that of oxygen, such as carbon dioxide gas or argon gas, retains at the bottom part.**
  To prevent anoxia due to the retention gas, provide ventilation equipment.
- **When it is difficult to provide ventilation equipment or the ventilation equipment does not give sufficient performance, ensure to use respiratory protective equipment.**
- **For preventive measure from falling due to anoxia, apply lifelines such as a safety belt.**
- **For the welding operation in a narrow space, perform the operation with the trained supervisor.**
- **Periodically inspect the ventilation equipment to ensure correct and proper performance of ventilation.**

To prevent any health damage due to poisonous gas or particle substances (fume) emitted in the welding operation, ensure to follow the instructions below:

⚠ WARNING

- **To reduce the dust concentration, install a partial exhaust facility such as fume suction device, or install the collective ventilation equipment.**
- **When it is difficult to provide a partial exhaust facility or the ventilation or exhaust facility does not give sufficient performance, ensure to use the respiratory protective equipment.**
- **In performing welding or cutting the coating steel plate or galvanized steel sheet, provide a partial exhaust facility or let the welding operator as well as the surrounding operators use respiratory protective equipment. (Welding or cutting the coating steel plate or galvanized steel sheet will cause toxic gas or fume.)**
- **Do not perform welding operation in the vicinity of degreasing, cleansing, or spraying operation. Performing the welding operation in such places may generate poisonous gas.**

5.1.2 Precaution for protective equipment

For protection from arc ray generated from welding, spatter and spattering dross and hearing disorder from noise, observe the following:

⚠ WARNING

- **Wear safety goggles with sufficient blocking effect or face shield in the work area and the surrounding.**
  Ignoring the above may cause inflammation and burn from arc ray.
- **Wear safety goggles in the work area and the surrounding.**
  Ignoring the above may cause injury in the eye or burn from spatter and spattering dross.
- **Wear protective equipment such as protective leather gloves, long-sleeve clothes, leg covers, and leather apron.**
  Ignoring the above may cause electrical shock and burn.
- **Install protective screens or barriers to protect the eyes of others in the work area from arc ray.**
- **Wear an ear protector when noise level is high.**
  Ignoring the above may cause hearing disorder.

5.1.3 Precautions on welding place

To avoid poor welding, ensure to follow the instructions below:

⚠ CAUTION

- **When the welding is performed outside with wind or when wind is caused by the indoor ventilation facility (including fan), provide a partition to avoid the arc generating part being exposed to wind.**

5.1.4 Precautions for high-frequency wave

Observe the following safety measures to avoid the electromagnetic interference:

⚠ CAUTION

- Note that the following facilities or equi pment nearby may cause high-frequency wave to invade and cause electromagnetic interferences:
  Input cable, signal cable, phone cable;
  Radio, television;
  Computers and other control unit;
  Industrial detector and safety equipment;
- Make the welding cables as short as possible.
- Run the welding cable as close to the floor or the ground as possible.
- The cable for base metal side and the cable for electrode side should be aligned with each other.
- Do not share the earth connections of th e base metal and the welding power source with those of other machines.
- Close all the doors and covers of the weldin g power source and securely fix them not to come loose for use.
- If electromagnetic interference has occurred, follow the steps above as well as the safety measures described in "3.2 .2 Electromagnetic interference".

5.2 Check before Welding

This section explains the check parameters before welding. To avoid welding problems beforehand, check the parameters below when the welding environments are prepared. (These are the check parameters recommended by GeKaMac. They also contain check parameters after power ON or after shield gas supply.)

For handling the cooling water circulation device, refer to the instruction manual of the cooling water circulation device. (When using the water-cooled welding torch)

Check parameter		Countermeasures	Check
1	There should be no loose connections of the cables.	Use a proper tool to ensure connection.	
2	There should be no dirt such as oil or spatter adhering on the connection terminals or connection part of cables.	Wipe off dirt so that the metal face of connection terminal or connection part is fully exposed. Using a metal brush is effective.	
3	The contact part of jig and welding work piece should not be painted.	Painted contact part could cause increased contact resistance, resulting in decrease in arc voltage. Polish the painted contact part using a grinder to expose the metal face.	
4	The contact part of jig and welding work piece should be free from unevenness due to influence of burn through, spatter, or aging deterioration.	Polish the surface of the jig using a grinder so that the welding workpiece and the jig can fully contact each other.	
5	The flow rate of shield gas should be adequate.	Set the flow rate of the shield gas adequately.	
6	Tungsten electrode tip condition	Grind the electrode tip as necessary.	
7	Tungsten electrode diameter is appropriate	Use a tungsten electrode with a diameter corresponding to the welding current.	

5.3 Power ON and Gas Supply

This section explains how to supply power and shield gas.

⚠ WARNING

- **Handle the gas cylinder according to the related laws or regulations as well as the internal standard of the customer.**
  Note that the gas cylinder contains a high-pressure gas. Wrong operation may cause gas explosion, resulting in serious physical injury.
- **In opening the valve of gas cylinder, keep your face away from the gas discharge port. If the connection should be loose, high-pressure gas may burst out.**
- **Keep your hands, fingers, hairs and clothes away from the rotating cooling fan and the open parts around the cooling fan;**
  it could result in entanglement with the internal fan.

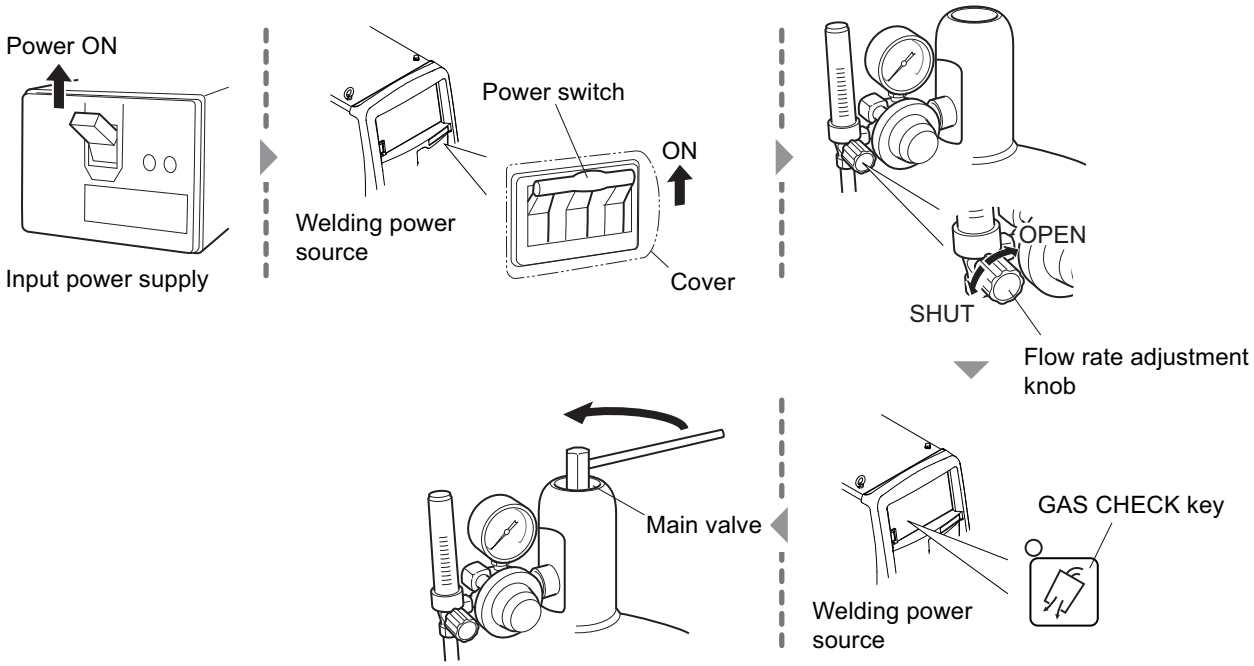

STEP

1. **Supply the input power.**
   - Operate the disconnect switch to supply the input power.
   - ⇒ The power LED switch lights up.
2. **Turn ON the power switch of the welding power supply.**
3. **Check that the flow rate adjustment knob is set to "SHUT", and press the GAS CHECK key.**
   - ⇒ The LED of the GAS CHECK key lights up, turning to the gas check status (shield gas is discharged).
   - ⇒ The gas check status continues for approximately two minutes, and automatically stops. To stop the gas check during the sequence, press the GAS CHECK key again to turn off the LED light.
4. **Open the main tap of shield gas.**
   - When the gas regulator is equipped with a pressure gauge, open the main tap by checking the pressure gauge until the appropriate pressure is obtained.

5. **Turn the flow rate adjustment knob to "OPEN", and adjust the flow rate of shield gas.**
6. **Press the GAS CHECK key.**

   ⇒ The LED of the GAS CHECK key lights off, to stop gas check.

5.4 Check and Setting of Welding Condition

This section explains how to check the welding condition as well as how to prevent erroneous operation on the operation panel (Erroneous operation prevention function).

5.4.1 Reading welding condition

Before starting welding operation, it is necessary to set the welding conditions. (☞ 6.4 Preparing Welding Conditions)

When the welding conditions are registered in the memory, it can be loaded to use for operation. (☞ 6.5 Memory Function of Welding Conditions)
When the condition is read, confirm that the welding conditions are correct.

5.4.2 Preventing erroneous operation on operation panel (Erroneous operation prevention function)

This section explains how to prevent erroneous operation on the operation panel.
To prevent accidental change of the welding condition, the erroneous operation prevention function is furnished to disable operations other than gas check and loading / saving of the welding condition. In using the analog remote control, however, the adjustment of current / voltage by the analog remote control can be done.

The erroneous operation prevention function does not need any password to release the lock. To allow only selected personnel to change the welding conditions, use the protection function of the welding conditions which requires a password. (☞ 7.1 Protection of Welding Conditions)

5.4.2.1 Activating erroneous operation prevention function

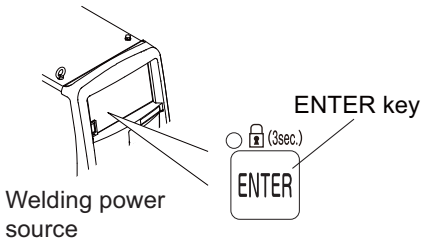

STEP

1. **Press and hold the ENTER key for approximately three seconds or more.**

   ⇒ When the erroneous operation prevention function is activated, the LED of the ENTER key flashes.

5.4.2.2 Deactivating erroneous operation prevention function

STEP

1. **Press and hold the ENTER key for approximately three seconds or more again.**

   ⇒ The LED of the ENTER key lights off, which deactivates the erroneous operation prevention function.

TIPS

- **Turning the power switch OFF does not deactivate the erroneous operation prevention function.**
- **Initializing the welding condition and the internal function deactivates the erroneous operation prevention function.**
  (☞ 7.4 Initializing Welding Conditions and Internal Functions)

5.5 Performing Welding Operation

This section explains the procedure from the start to the end of the welding operation.

5.5.1 Operation of welding start

STEP

1. **Check that the welding conditions are correctly set and operate the torch switch to start the welding. (☞ 6.6.3 Crater setting)**

   - During the welding, the welding current is displayed on the left digital meter and the welding voltage is displayed on the right digital meter both in a real time basis. This indication is the average value of the output per approximately one second.

2. **A series of welding operation is completed by the torch switch operation. (☞ 6.6.3 Crater setting)**

   - At the end of welding, the average value of the welding current and the welding voltage at the last second of the welding sequence is displayed on each digital meter in a flashing mode. (except for the output at crater-filler)
   - High frequency voltage is impressed for five seconds when the Touch Start key is OFF. High frequency voltage is not impressed when the Touch Start key is ON. (☞ 6.6.3 Crater setting)
   - In the AC STICK welding and the DC STICK welding, arc is started with the welding rod gripped by the welding rod holder and the welding rod touched to the base metal.

TIPS

- **When switched to AC STICK welding or DC STICK welding, or in about 5 seconds after the welding power source is powered on at AC STICK welding setting or DC STICK welding setting, no-load voltage is automatically output. While no-load voltage is outputted, the set current value flashes on the right digital meter.**
  To interrupt the output, turn off the power switch or switch the welding method to the AC TIG welding.
- **The displayed average value is processed by the software. Note that the value cannot be guaranteed as the control data for a measuring instrument.**

5.5.2 Operation during welding

This section explains the operation to adjust the welding current as necessary during welding. Welding current can be adjusted during each sequence (initial current, welding current, or crater current)

TIPS

- **When the analog remote control (option) is connected, the welding current (base current) cannot be adjusted on the operation panel. Adjust the welding current and the pulse current on the analog remote control.**

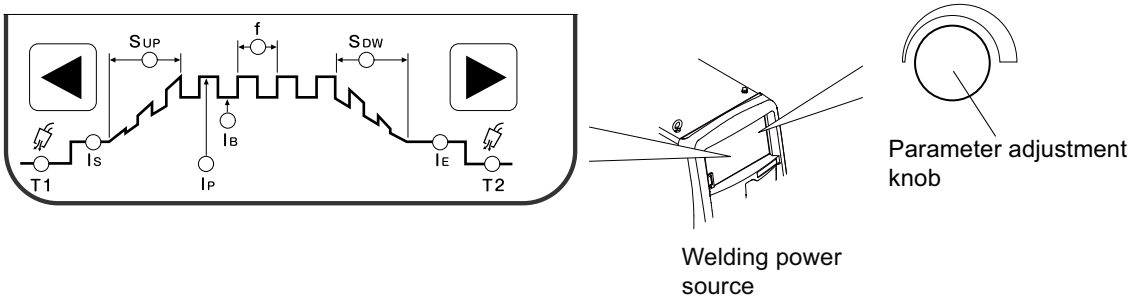

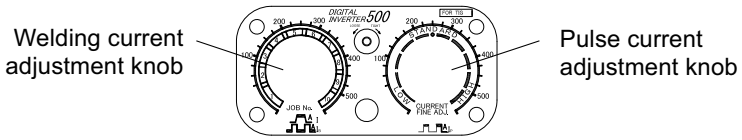

Analog remote control (Optional accessory)

STEP

1. **Press the [◀] key or [▶] key.**

   ⇒ The displays of the left/right digital meter switches to the set values.

2. **Adjust the welding current.**

   ⇒ When the LED of the [◀] key is off, press the [◀] key to light up its LED. (When adjustment is made on the remote control, this operation is not necessary.)

   ⇒ Turn the parameter adjustment knob to adjust welding current

3. **Press the [◀] key or [▶] key.**

   ⇒ The displays on the left/right digital meters return to the display of current/voltage in welding.

TIPS

- **When no operation is performed for approximately five seconds, the display will return to the one showing current/voltage in welding.**
- **By enabling the TORCH CURRENT ADDJUSTMENT key, increasing/decreasing of the welding current can be done by the torch switch operation. (only in the main welding in the CRATER-FILL ON setting) (☞ 6.8 Adjusting current with torch switch)**

5.5.3 Operation at welding end

This section explains the supply stop procedure of power / shield gas after the welding end.

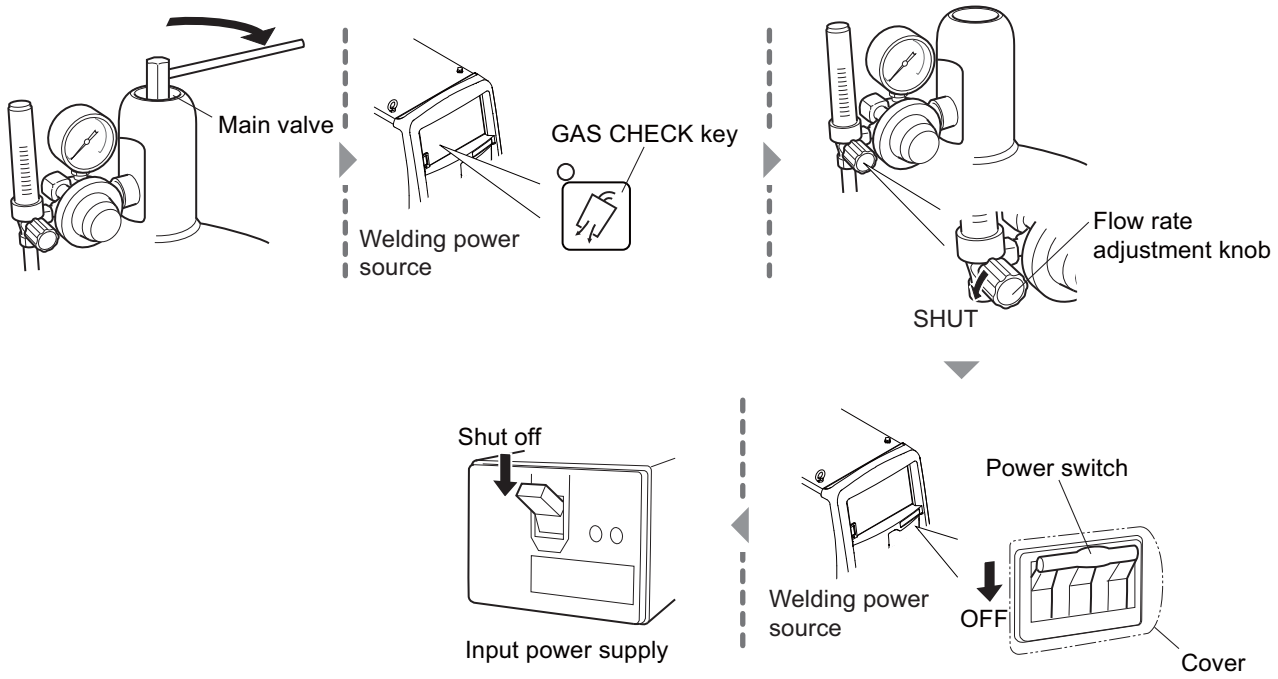

STEP

1. **Close the main tap of the shield gas.**
2. **Press the GAS CHECK key.**
   ⇒ The LED of the GAS CHECK key lights up, and the shield gas remained in the gas piping is discharged.
3. **After the shield gas is discharged, press the GAS CHECK key.**
   ⇒ The LED of the GAS CHECK key lights off, to stop gas check.
4. **Set the flow adjustment knob to “SHUT", to adjust the shield gas flow rate to zero.**
5. **Turn OFF the power switch of the welding power supply.**
   ⇒ The power LED switch lights off.
6. **Shut off the input power.**
   ● Operate the disconnect switch to shut off the input power.

Chapter 6 Welding Condition

This chapter explains the functions on the operation panel as well as how to set the welding conditions.

6.1 List of Welding Conditions

This section explains the parameters / functions settable in the welding power source.

6.1.1 Parameter (Welding parameter)

Parameter		Set Range	Initial Value	Descriptions
Pre-flow time		0 to 99 sec	0.3 sec	Set the gas discharge time before welding starts. Displays the value in the unit of 0.1 sec in case of less than 10 sec. Displays the value in the unit of 1 sec in case of 10 sec to 99 sec.
Current	Pulse current	1.0 to 380 A	150 A	Pulse current: sets the pulse peak current when Pulse is ON. Base current: sets the pulse base current when Pulse is ON. Welding current: sets the current value during welding. Displays the value in the unit of 0.1 A in case of less than 10 A. Displays the value in the unit of 1 A in case of 10 A to 350 A.
	Welding current (base current)	1.0 to 380 A	150 A	
	STICK welding:	10 to 380 A	150 A	Sets the current value in the STICK welding mode.
Initial current		1.0 to 380 A	150 A	Sets the current value soon after welding starts.
Crater current		1.0 to 380 A	150 A	Sets the current value soon after welding ends.
Post-flow time		0 to 99 sec	7.0 sec	Set the gas discharge time after the welding ends. Displays the value in the unit of 0.1 sec in case of less than 10 sec. Displays the value in the unit of 1 sec in case of 10 sec to 99 sec.
Arc spot time		0.1 to 10 sec	3.0 sec	Set the welding time at Arc Spot.
Up-slope time		0 to 10 sec	1.0 sec	Sets the slope time from the initial current to the welding current.
Down-slope time		0 to 10 sec	1.0 sec	Sets the slope time from the welding current to the crater current.
Welding condition memory No		1 to 100	1	Registers welding conditions. (Capable to register up to 100.)
Pulse frequency		0.1 to 999 Hz	2.0 Hz	Sets the pulse frequency when Pulse is ON. Displays the value in the unit of 0.1 Hz in case of less than 10 Hz. Displays the value in the unit of 1 Hz in case of 10 Hz to 500 Hz. Displays the value in the unit of 10 Hz in case of 500 Hz to 700 Hz. Displays the value in the unit of 20 Hz in case of 700 Hz to 999 Hz.
AC frequency		30 to 500 Hz	70 Hz	Sets the AC frequency in AC TIG mode.
Cleaning width		-20 to 20	0	Sets the strength of cleaning in AC TIG mode.
AC-DC switchover frequency		0.1 to 50 Hz	1 Hz	Sets the AC-DC switchover frequency in AC-DC TIG mode.

6.1.2 Function

Function	Initial value	Setting parameter
CRATER-FILL	OFF	OFF/ON/ON (repeat)/Arc Spot
Welding method	AC TIG	AC TIG/AC-DC TIG/DC TIG/AC STICK/DC STICK
AC waveform	Standard	Standard/Soft/Hard
Initial current	OFF	ON/OFF
Touch start	OFF	ON/OFF
Pulse	OFF	ON/OFF
Slope	OFF	ON/OFF
Torch current adjustment	OFF	ON/OFF

6.1.3 Internal function

Details of internal function (☞ 6.10 Setting Internal Functions)
The functions with circle mark (O) on the Memory row can be stored with the welding conditions.

No.	Function Name	Setting range	Initial value	Explanation	Memory
F1	Fine adjustment of starting current	10 to 200	100 (%)	Fine adjusts the starting current.	—
F2	Cheange in sequence at arc spot	OFF/ON	OFF	Welding ends even in the arc spot period when the start switch turns off in the Arc Spot mode.	—
F3	Cheange in sequence at CRATER-FILL ON (repeat)	OFF/ON	OFF	In CRATER-FILL ON (repeat) mode, welding current and crater current can be switched over with each other by tapping the torch switch. Press the start switch for a long time to stop welding.	
F4	Auto/Manual mode	0/1/2/3/4	0	Switches the I/O settings of the welding power source: 0: Manual machine 1: Automatic machine 1 2: Automatic machine 2 3: Almega (Roboweld robots) specification 4: Almega (Roboweld robots) specification (for high speed communication)	—
F5	Maximum external command voltage	10.0/12.0/ 14.0/15.0	15.0 (V)	Sets the maximum value of voltage supplied when current/voltage command is externally input.	—
F6	Hazard reducing function	ON/OFF	ON	Sets ON/OFF of the hazard reducing function in the DC STICK welding mode. ON: Hazard reducing function is enabled. OFF: Hazard reducing function is disabled.	—
F7	Pulse width setting	5 to 95	50	Sets the ratio of the pulse width in one cycle during pulse output	
F8	Welding result display time	0 to 60	20 (s)	Sets the display time for the current/voltage after completion of welding.	—
F9	Analog remote control scale	100/200/300/ 400	400 (A)	Configures the settings of scale plate of the analog remote control.	—
F10	Analog remote control upper limit setting	10 to 380	380 (A)	Sets the upper limit of the current setting range of the welding current (base current) and the peak current that can be adjusted by the analog remote control.	—
F11	Current increase and decrease by single-clicking	-100 to 100	0 (A)	Increases or decreases the current by single-clicking of the torch switch. Sets the increase/ decrease value of the current at that time.	
F12	Current increase and decrease by double-clicking	-100 to 100	0 (A)	Increases or decreases the current by double-clicking of the torch switch. Sets the increase/ decrease value of the current at that time.	

No.	Function Name	Setting range	Initial value	Explanation	Memory
F13	Switchover of current adjustment operation at pulse ON	1 to 2	1	You can switch operation as follows when Pulse is set ON and the current adjustment function by the torch switch is enabled. 1: Changes pulse current only without changing base current by click operation. 2: Changes both pulse current and base current at the same current value (set by F11 and F12) by click operation.	—
F14	AC ratio	10 to 90	70 (%)	Sets the AC ratio in AC-DC TIG mode.	○
F15	Switchover of cleaning width display	OFF/ON	OFF	Displays the cleaning width setting in AC TIG mode and AC-DC TIG mode as EP ratio.	—
F16	Adjustment of pulse waveform	0/1/2	0	Adjusts the shape of the pulse waveform when the pulse is set to "ON". 0: Normal pulse 1: Soft pulse 2: Output stable pulse	—
F17	Switchover of memory condition interlocking function	OFF/ON	OFF	When connected with the filler control device, welding conditions memory function of the welding power source and the wire feed condition memory function of the filer control device are interlocked and the memory condition number is sheared.	—
F18	No function	OFF (fixed)	OFF	No functions are provided.	—
F19	Alarm setting switching	OFF/ON	OFF	Sets the output status when an error of the alarm level is detected: OFF: Ineffective ON: Stops the output	—
F20	Low input voltage detection level	260 to 380	320 (V)	Adjusts the low primary input voltage detection level.	—
F21	Maximum cooling fan operation	OFF/ON	OFF	Sets the operation mode of cooling fan: OFF: Economical operation ON: Rotates the fan at maximum speed at all time	—
F22	Operation sound switching	OFF/ON	ON	Sets the operation sound when any key is pressed on the operation panel: OFF: Turns off the sound ON: Turns on the sound	—
F23	Sleep mode switching time	0 to 10	0	Sets the time until the welding power source enters into sleep mode: 0: OFF 1 to 10: 1 min to 10 min	—
F24	Operation time of water-cooled pump	20 to 60/ON	20 (min)	Sets the operation time of water-cooled pump after welding ends. Set the time in the range of 20 to 60 minutes or set to ON (always ON).	—
F25	External output 1 setting	0 to 4	0	Sets the functions of output terminal of the programmable I/O.	—
F26	External output 2 setting				
F27	External output 3 setting				
F28	External output 4 setting				
F29	External input 1 setting	0 to 4	0	Sets the functions of input terminal of the programmable I/O.	—
F30	External input 2 setting				
F31	External input 3 setting				
F32	External input 4 setting				
F33	TIG interval function	OFF/ON	OFF	Suppresses heat input to the work by repeating ON/OFF of arc during output.	—
F34	TIG interval function Arc ON time	0.05 to 9.99	0.50	Sets the arc ON time when TIG interval function is set to "ON".	—
F35	TIG interval function Arc OFF time	0.05 to 9.99	0.50	Sets the arc ON time when TIG interval function is set to "OFF".	—

No.	Function Name	Setting range	Initial value	Explanation	Memory
F36	STICK welding torch switch function	OFF/ON	OFF	You can operate ON/OFF of output in AC STICK welding mode or DC STICK welding mode by the ON/OFF operation of the torch switch.	—
F37	AC STICK welding - switchover of characteristics	OFF/ON	OFF	Sets the static characteristics in AC STICK welding mode. OFF: Constant voltage characteristics ON: Drooping characteristics	—
F38	AC STICK welding - adjustment of drooping characteristics current change amount	-100 to 100	0 (V)	Set the current change amount when switchover of characteristics is set to "ON" for drooping characteristics.	—
F39	Current display adjustment (GAIN)	-20 to 20	0 (%)	Adjusts the current values displayed on the digital meter.	—
F40	Current display adjustment (OFFSET)	-20 to 20	0 (A)		
F41	Voltage display adjustment (GAIN)	-20 to 20	0 (%)	Adjusts the voltage values displayed on the digital meter.	—
F42	Voltage display adjustment (OFFSET)	-2.0 to 2.0	0.0 (V)		
F43	CAN ID	1 to 16	1	Sets CAN ID numbers to be used in the PC monitoring system, etc.	—
F44	Reading welding conditions with remote control	OFF/ON	OFF	Sets whether to read "1" to "10" of the welding conditions stored on the memory via the analog remote control: OFF: Not to read ON: Reads	—
F45	Special crater sequence	OFF/ON	OFF	Sets the initial current and crater current as applied for a fixed period of time regardless of the torch switch operation: OFF: Not applied ON: Applied (Time set by F46 and F47 is applied)	○
F46	Special crater sequence initial time	0.0 to 10.0	0.0 (s)	Sets initial time in the special crater sequence. (available when "ON" is selected in F45)	○
F47	Special crater sequence crater time	0.0 to 10.0	0.0 (s)	Sets crater time in the special crater sequence. (available when F45 is enabled)	○
F48	Setting change of current value (initial current, crater current)	OFF/ON	OFF	When "CRATER ON" is selected, sets the current value of the initial current and crater current in the percentage based on the current value of the welding condition. OFF: invalid ON: settable with percentage	—
F49	Setting of current value (initial current)	10 to 300	100 (%)	Sets the current value of the initial current in the percentage based on the current value of the welding condition.	—
F50	Setting of current value (crater current)	10 to 300	100 (%)	Sets the current value of the crater current in the percentage based on the current value of the welding condition.	—
F51	No function	OFF (fixed)	OFF	No functions are provided.	—
F52	Data type of data log function	0 to 1	0	Sets sample data on the data log: 0: No sampling 1: Current command / welding current / welding voltage	○
F53	Data log function sampling speed	1/2/3	2	Sets sampling interval of the data log function. 1: 10 ms 2: 100 ms 3: 1 s	—
F54	No function	OFF (fixed)	OFF	No functions are provided.	—

No.	Function Name	Setting range	Initial value	Explanation	Memory
F55	Arc loss detection time	OFF (fixed)	OFF	Used when connecting with automatic machine made by other manufacturer.	—
F56	Arc start error detection time				
F57	WCR output ON delay time				
F58	WCR output OFF delay time				
F59	Analog setting switch				
F60	Electrode formation function	OFF/1.6/2.4/ 3.2/4.0/4.8/ 5.6/6.4	OFF	Sets ON/OFF of the function to form an optimum electrode tip shape by rounding the electrode at the arc start in the AC TIG mode or AC-DC TIG mode. OFF: No electrode formation function 1.6 to 6.4 (Φ): Sets the electrode diameter to be rounded.	—
F61	Fine adjustment of electrode formation time	-99 to 99	0 (%)	Fine adjust the shape of the electrode tip when the electrode formation function is set to "1.6 to 6.4".	—
F62	Extended cable mode	OFF/ON	OFF	Sets the welding control for an extension cable when the welding power source is used in AC TIG mode or AC-DC TIG mode. OFF: Standard mode (Standard AC TIG mode and AC-DC TIG mode) ON: Extension cable mode (Extended power cable mode)	—
F77	Welding power source identification numbers	1 to 999	1	Sets welding power source identification numbers of Welding result control function.	—

6.2 Function on Operation Panel

This section explains the function of displays and keys arranged on the operation panel.

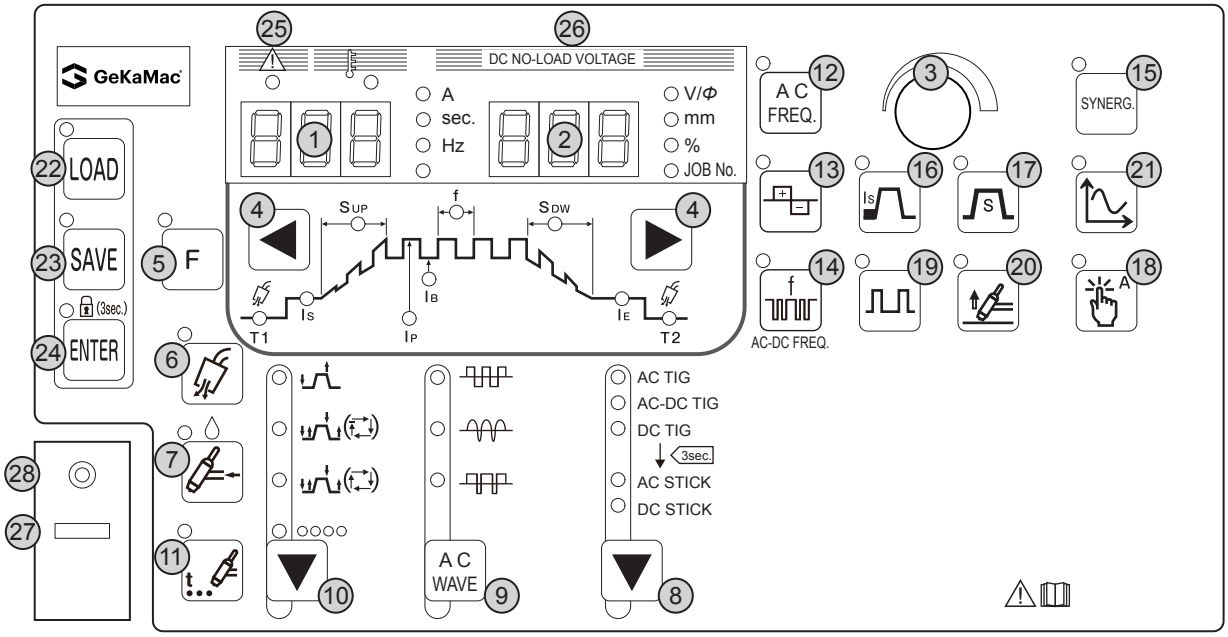

No.	Name	Function
1	Left digital meter	Displays various information. • The welding current is displayed in welding, and the LED of "A" lights up. • In each setting, corresponding setting values are displayed, and the LED lit position automatically switches.
2	Right digital meter	Displays various information. • The welding voltage is displayed in welding. • In each setting, corresponding setting values are displayed, and the LED lit position automatically switches.
3	Parameter adjustment knob	Adjusts each parameter value such as welding current.
4	PARAMETER SELECT keys	Switches the welding sequence as the set target. In welding, also switches the display to the value set in the welding condition being used for welding.
5	F (function) key	Sets the internal function of welding power source. (☞6.10 Setting Internal Functions) Pressing this key for a second or more lights up the LED, and the sequence transits to the Internal Function Setting mode.
6	GAS CHECK key	Discharges the shield gas. (☞5.3 Power ON and Gas Supply) Pressing this key makes the LED lit, allowing the shield gas to be discharged. After discharging the gas for approximately 2 minutes automatically stops the discharge. Pressing this key again lights off the LED, stopping the shield gas discharge.
7	TORCH key	Selects whether to use the air-cooled welding torch or the water-cooled welding torch. Press the key to switch over each mode. • LED ON: Water-cooled welding torch mode • LED OFF: Air-cooled welding torch mode
8	WELDING METHOD key	Select the type of welding method. To select AC STICK welding, hold down the WELDING METHOD key for 3 seconds while the DC TIG mode is selected. • The LED of the parameter in selection lights up
9	AC WAVEFORM key	Selects the type of AC welding waveform to use. • For details of AC waveform (☞6.7.2 Setting AC waveform)
10	CRATER-FILL key	Select the crater treatment method or arc spot at the end of welding. The LED of the parameter in selection lights up. • For details of the crater treatment (☞6.6.3 Crater setting) • For details of arc spot (☞6.6.5 Arc spot time)

No.	Name	Function
11	SPOT TIME key	Sets the welding time when "ARC SPOT" is selected by the CRATER-FILL key. (☞6.6.5 Arc spot time) Pressing this key makes the LED lit, enabling to adjust the welding time by the parameter adjustment knob. The set time is displayed on the left digital meter.
12	AC FREQUENCY key	Sets the AC frequency when "AC TIG" or "AC STICK" is selected with the WELDING METHOD key. (☞ 6.7.3 Setting AC frequency) Pressing this key turns on the LED, enabling to adjust the AC frequency with the parameter adjustment knob. The set frequency is displayed on the left digital meter.
13	CLEANING WIDTH key	Sets the cleaning width when "AC TIG" is selected with the WELDING METHOD key. (☞ 6.7.4 Setting cleaning width) Pressing this key turns on the LED, enabling to adjust the cleaning with the parameter adjustment knob. The set cleaning width is displayed on the right digital meter.
14	AC-DC SWITCHOVER FREQUENCY key	Sets the AC-DC switchover frequency when "AC-DC TIG" is selected with the WELDING METHOD key. (☞ 6.7.5 Setting AC-DC switchover frequency) Pressing this key turns on the LED, enabling to adjust the AC-DC switchover frequency with the parameter adjustment knob. The set frequency is displayed on the left digital meter.
15	WELDING SETTING GUIDE key	Turns ON/OFF of the Welding Setting Guide. (☞ 6.9 Welding Setting Guide) Pressing this key turns on the LED.
16	INITIAL CURRENT SELECT key	When "CRATER-FILL ON" is selected by the CRATER-FILL key, the sequence of initial current is added before the main welding.(☞ 6.6.3 Crater setting) Pressing this key makes the LED lit, adding the sequence of initial current.
17	SLOPE SELECT key	When "CRATER-FILL ON", "CRATER-FILL ON (rep eat)" or "ARC SPOT" is selected by the CRATER-FILL key, Up-slope and Down-slope are added. Pressing this key makes the LED lit, adding Up-slope and Down-slope.
18	TORCH CURRENT ADJUSTMENT key	Adds the current adjustment function by the torch switch operation. Pressing this key long makes the LED lit, switching the mode to the CREATER-FILL ON (repeat) mode and adding the current adjustment function by the torch switch operation. (☞ 6.8 Adjusting current with torch switch)
19	PULSE SELECT key	Pressing this key makes the LED lit, entering the Pulse welding mode. Pressing this key again turns off the LED, restoring the DC welding mode.
20	START SELECT key	Switches the starting method. Pressing this key makes the LED lit, switching to the touch start method.
21	WELD MONITOR key	Sets welding control function. (See Chapter 7 Administrator Functions.) Pressing this key for a second or more lights up the LED, and the sequence transits to the welding control mode.
22	LOAD key	Reads the registered welding condition from the internal memory. (☞ 6.5 Memory Function of Welding Conditions)
23	SAVE key	Registers the set welding condition in the internal memory. (☞ 6.5 Memory Function of Welding Conditions)
24	ENTER key	Carries out the administrative functions such as key lock, password, and registration of welding condition to the memory. Depressing the key for three seconds or more makes the LED lit, enabling the key lock function.
25	WARNING/Temperature LED	Lights up or flashes when any failure or abnormal condition occurs in the welding power source. (☞ 9.1 Action in Case of Error)
26	"DC no-load voltage outputting" LED	Illuminated when no-load voltage output is detected when the welding power source is being used in "AC TIG" or "AC STICK". This is a function to notify the generation of DC output (no-load voltage output) when an AC output welding method (AC TIG, AC STICK) is selected.
27	USB connector	For variety of registered data, writes to or reads from the USB memory. (☞Chapter 7 Administrator Functions)
28	Terminals for service use	Terminals for the GeKaMac service use.

6.3 Welding Conditions

This section explains basic welding conditions with useful functions.

6.3.1 Basic welding conditions

This section explains the basic welding conditions. To carry out the welding operation, the followings should be considered:

- Plate thickness and materials of welding material
- Shield gas flow rate
- Welding current
- Electrode diameter

6.3.2 Useful functions

This chapter explains the useful functions for the welding power source.

- Registration of welding power source (☞ 6.5 Memory Function of Welding Conditions)
  By using the memory function of the welding conditions, the welding current and other parameters currently set can be registered and loaded to use for operation.
- Current adjustment function by the torch switch operation (☞ 6.8 Adjusting current with torch switch)
  This function can increase and decrease the welding current set by the torch switch operation. (Available only for the main welding in the CRATER-FILL ON mode.)
- Welding Setting Guide (☞ 6.9 Welding Setting Guide)
  This is a function in which the welding machine automatically determines appropriate welding conditions such as (Welding current, Initial current (when initial current is selected), Crater current (when CRATER-FILL ON is selected), Pre-flow time and Post-flow time, and Up-slope time and Down-slope time) by selecting the electrode diameter, the base metal material, the weld joint shape, and the base metal plate thickness.

6.4 Preparing Welding Conditions

This section explains the setting process of basic welding conditions.

Check welding material suitable for the welding condition	(☞ 10.3 Materials for Setting Welding Conditions)
Start setting	(☞ 6.6.2 Start setting (Touch/High-frequency))
Up-slope setting	(☞ 6.6.4 Slope setting)
Setting crater treatment	(☞ 6.6.3 Crater setting)
Setting pre-flow (Setting gas discharge time)	(☞ 6.6.1 Setting welding parameter)
Initial current setting (Welding current setting)	(☞ 6.6.1 Setting welding parameter)
Main welding setting (Welding current pulse setting)	(☞ 6.6.1 Setting welding parameter)
Down-slope setting	(☞ 6.6.1 Setting welding parameter)
Crater current setting (Welding current setting)	(☞ 6.6.1 Setting welding parameter, 6.6.3 Crater setting)
Setting post-flow (Setting gas discharge time)	(☞ 6.6.1 Setting welding parameter)
Registering the welding conditions set above as necessary	(☞ 6.5 Memory Function of Welding Conditions)

6.5 Memory Function of Welding Conditions

This section explains the memory function of welding conditions.
The welding power source is equipped with the function to register the welding conditions and reads them out for use. The number of welding conditions that are able to be registered are 100 at maximum.
Single welding condition can contain the following information at registration:

- Welding mode selected by the keys on operation panel
- Welding current for each welding sequence (☞ 6.6.1 Setting welding parameter)
- Part of internal function (☞ 6.1.3 Internal function)

⚠ CAUTION

- The welding conditions (electronic data) stored by this function are susceptible to occurrence of static electricity, impact, repair, etc., and there is a possibility that the stored contents may be changed or lost. BE SURE TO MAKE A COPY FOR IMPORTANT DATA.
- Please note that GeKaMac will not be liable for any alteration or loss of electronic information.

NOTE

- When the analog remote control (option) is connected, the set values of the analog remote control apply to the welding current (base current) and pulse current values of the main welding condition even if the registered welding condition is loaded.

TIPS

- Use of the internal function (F44) enables to read out the registered welding condition by the analog remote control (optional). (☞ 6.10 Setting Internal Functions)

6.5.1 Memory registration of welding conditions

This section explains how to register the current welding condition set on the operation panel to the memory.

STEP

1. **Press the SAVE key.**

⇒ The system transits to the storage function mode and the LED of the SAVE key lights up.

⇒ The condition number (registration No.) is displayed on the right digital meter in a flashing mode, and the LED of JOB No. lights up.

⇒ On the left digital meter, the setting value of the welding current registered to the JOB No. if any is displayed (if there is no registration, "- - -" is displayed), and the "A" LED lights up.

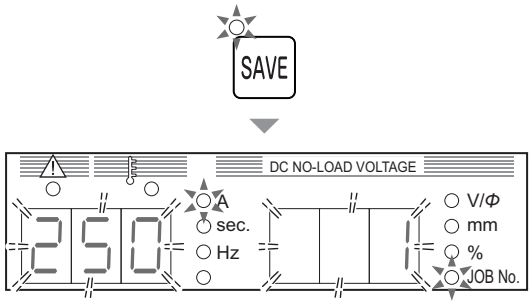

2. **Turn the parameter adjustment knob, and select the JOB No.**

⇒ When there is no registration data on the selected JOB No., "- - -" is displayed on the left digital meter.

⇒ When there is any registration data on the selected JOB No., the setting value of the welding current is displayed on the left digital meter. At this time, the LEDs for the keys of crater or wire material also light up.

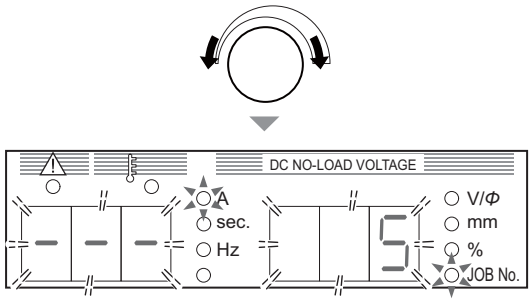

3. **Press the ENTER key.**

⇒ The LED of ENTER key lights up.

⇒ Pressing the DISPLAY CHANGE key enables to check the value of welding parameter registered in the JOB No. to overwrite. The setting values are displayed on the right/left digital meters in a flashing mode.

⇒ To change the JOB No. to register, press the SAVE key. The display returns to the status described in step 1.

⇒ To cancel the memory registration, press the LOAD key. The storage function mode is terminated.

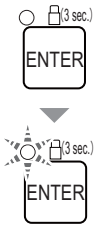

4. **Press the ENTER key.**

⇒ The welding condition is registered with the selected JOB No., and the storage function mode is terminated.
The registered welding condition can be read out for use.

6.5.2 Read out of welding conditions

This section explains how to read out the welding conditions registered in the memory.

TIPS

- **The current welding condition set on the operation panel is overwritten by the welding conditions read out. To save the current welding condition, ensure to register it to the memory.**

STEP

1. **Press the LOAD key.**

⇒ The system turns to the load mode, and the LED of the LOAD key lights up.

⇒ The condition number (registration No.) is displayed on the right digital meter in a flashing mode, and the LED of JOB No. lights up.

⇒ On the left digital meter, the setting value of the welding current registered to the JOB No. if any is displayed (if there is no registration, "- - -" is displayed), and the "A" LED lights up.

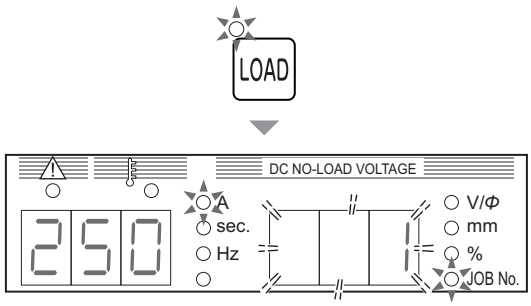

2. **Turn the parameter adjustment knob, and select the JOB No. to read out.**

⇒ When there is no registration data on the selected JOB No., "- - -" is displayed on the left digital meter.

⇒ When there is any registration data on the selected JOB No., the setting value of the welding current is displayed on the left digital meter. At this time, the LEDs for the keys of crater or wire material also light up.

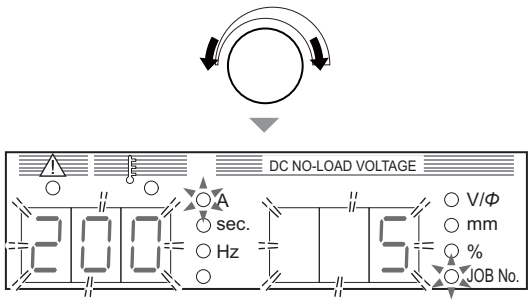

3. **Press the ENTER key.**

⇒ The LED of ENTER key lights up.

⇒ Pressing the DISPLAY CHANGE key enables to check the set values of welding conditions (welding parameters) to read out. The setting values are displayed on the right/left digital meters in a flashing mode.

⇒ To change the JOB No. to read out, press the LOAD key. The display returns to the status described in step 1.

⇒ To cancel the read out, press the SAVE key. The read mode is terminated.

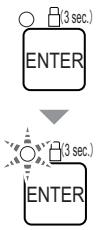

4. **Press the ENTER key.**

⇒ The welding condition is registered with the selected JOB No., and the read mode is terminated. The registered welding condition can be loaded to use for operation.

6.5.3 Deletion of memory registration

This section explains how to delete the welding conditions registered to the memory.

NOTE

- **The deleted data cannot be restored. Before deleting the stored welding condition, carefully check the welding JOB No. to delete.**

STEP

1. **Turn off the power switch.**

2. **With the LOAD key and the SAVE key depressed together, turn ON the power switch.**

● Depress these two keys until "dEL" is displayed on the left digital meter. Release the keys after "dEL" is displayed.

⇒ "dEL" is displayed when the system transits to the DELETE mode.

⇒ The condition number (registration No.) is displayed on the right digital meter in a flashing mode, and the LED of JOB No. lights up.

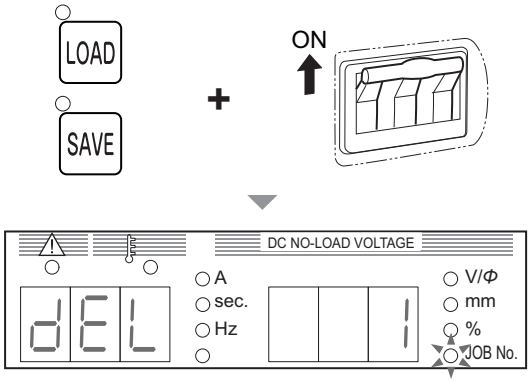

3. **Turn the parameter adjustment knob, and select the JOB No. to delete.**

● To delete all the registration at the same time, turn the parameter adjustment knob counterclockwise, to display "ALL" on the right digital meter.
When "ALL" is selected, the current welding condition set on the operation panel is also deleted, and the welding parameters including the internal functions return to the initial values.

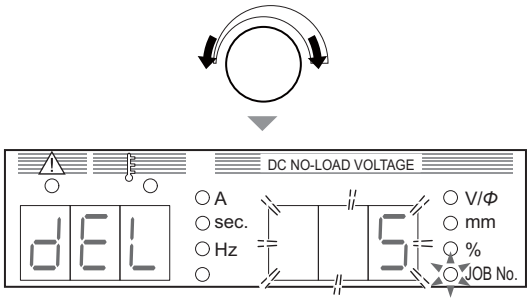

4. **Press the ENTER key.**

⇒ The display "dEL" on the left digital meter starts flashing.

⇒ To change the JOB No. to delete, press the LOAD key or the SAVE key. The display returns to the status described in step 2.

⇒ To cancel the deletion, turn OFF the power switch. The delete mode is terminated.

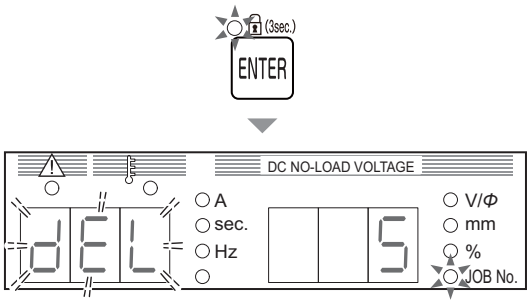

5. **Press the ENTER key.**

⇒ The welding condition of the selected JOB No. is deleted, and "End" is displayed on the right/left digital meters.

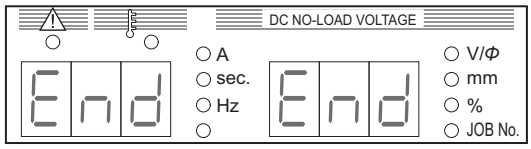

6. **Check that "End" is displayed on the left/right digital meters and turn off the power switch.**

⇒ The power LED switch goes off. The status returns to normal when the power switch is turned on.

6.6 Setting Welding Conditions

This section explains how to set the welding conditions (welding mode or welding parameters).

6.6.1 Setting welding parameter

This section explains how to set the welding parameters (gas discharge time, welding current). Welding parameters are set according to the welding sequence.

6.6.1.1 Welding sequence

The basic welding sequence is the process of PRE FLOW, MAIN CONDITION, and POST FLOW. To this sequence, initial current and crater current can be added depending on the crater setting. The welding parameters such as gas discharge time, welding current and voltage should be set to this sequence.

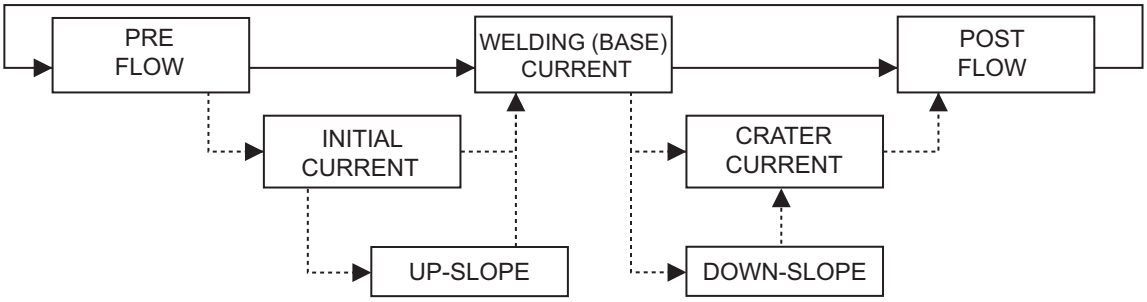

Each sequence process has the following description:

Process	Description
PRE FLOW	It is the sequence to discharge gas before the welding starts.
INITIAL CURRENT	It is the sequence to process the welding start.
UP-SLOPE	This is the slope when the initial current is switched over to the main current.
WELDING (BASE) CURRENT	It is the welding sequence.
DOWN-SLOPE	This is the slope when the main current is switched over to the crater current.
CRATER CURRENT	It is the sequence to process the crater part.
POST FLOW	It is the sequence to discharge gas after the welding completes.

6.6.1.2 Welding parameter setting

This section explains how to set the welding parameters (gas discharge time, welding current) according to the welding sequence.

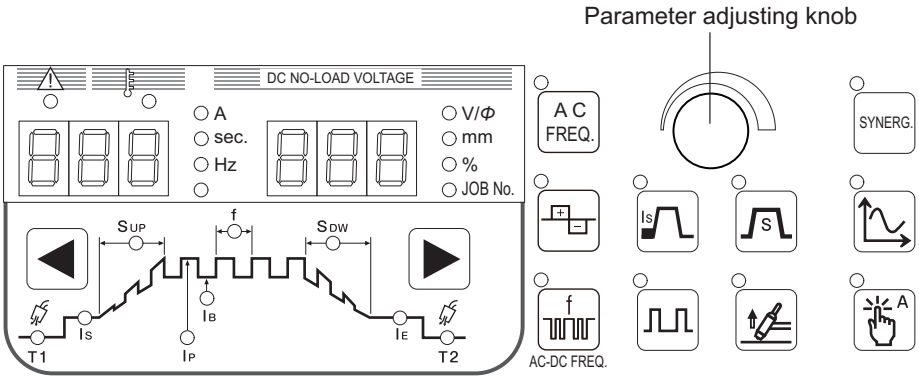

STEP

1. **Set the gas discharge time.**
   - Select the "PRE FLOW" (or "POST FLOW") LED by pressing the [◀] key or [▶] key.
   - Turn the parameter adjustment knob to set the gas discharge time.
     The set parameter is displayed on the left digital meter.
2. **Set the welding current.**
   - Select the "WELDING (Base) CURRENT" (or "INITIAL CURRENT" or "CRATER CURRENT") LED by pressing the [◀] key or [▶] key.
   - Confirm that the LED "A" (unit of welding current) is lit.
   - Turn the parameter adjustment knob to set the welding current.
     The set parameter is displayed on the left digital meter.
3. **Register to the memory as necessary. (☞ 6.5 Memory Function of Welding Conditions)**

6.6.2 Start setting (Touch/High-frequency)

Switch the starting method with the START SELECT key. The "Touch Start" mode is on when the LED at the upper left of the key is lit while the "High Frequency Start" mode is on when the LED is not lit.

- High Frequency Start

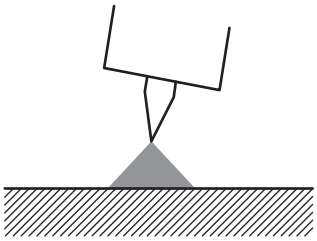

STEP

1. Press the torch switch while the electrode is apart from the base metal.
2. High frequency sparks fly to generate arc between the base metal and the electrode.

NOTE

- If arc does not start within five seconds after high frequency sparks begin to fly, generation of high frequency sparks and output voltage will stop automatically. If high frequency sparks stop, turn off the torch switch once and then turn it on again.
  When such a condition continues, check the following points.
  - Confirm that the cable is firmly connected with the torch.
  - Confirm that the electrode tip is not rough.

- Touch Start
  Touch start is a starting method to make current flow with the electrode in touch with the base metal and generate arc by separating the electrode from the base metal.
  At the startup, no electromagnetic disturbance occurs since high frequency voltage is not generated.

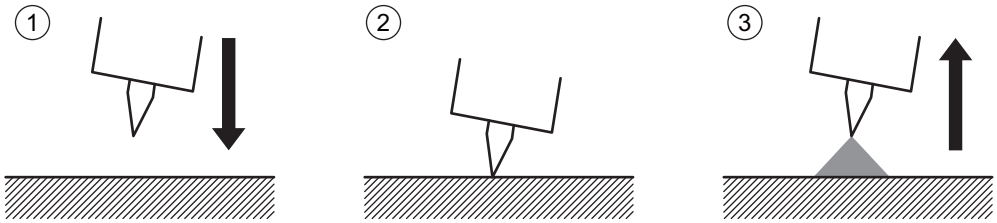

STEP

1. Press the torch switch while the electrode is off the base metal.
2. Contact the electrode with the base metal.
   ● Press the torch switch while the electrode is off the base metal.
3. Pull the electrode off the base metal.
   ⇒ Arc is generated.

⚠ CAUTION

- No-load voltage will not be impressed even when the torch switch is pressed while the electrode is off the base metal. However, only gas flows.
- It becomes harder to start arc as the number of times of arc start increases due to the dirt (getting white) adhered on the surface of the electrode. Grind the electrode in such a case.
- You can start arc immediately after separating the electrode from the base metal since there is no pre-flow period. However, if a defect is formed at the welding start portion, adjust the time to pull the electrode from the base metal after contacting them to establish the pre-flow time as necessary in order to completely shut off the electrode and the base metal from air with argon gas.

6.6.3 Crater setting

This section explains the details of crater treatment and torch switch operation.

There are modes listed below for the crater setting. For initialization current, select availability by the INITIAL CURRENT SELECT key.

Mode	Initial condition	Description
CRATER-FILL OFF	-	In the welding process, only available process is the main welding. (☞ 6.6.3.1 Crater "OFF")
CRATER-FILL ON	Unavailable	After the main welding, you can weld by a crater current. (☞ 6.6.3.2 Crater "ON" (no initial current))
	Available	In addition to the above, you can weld by the initial current before the main welding. (☞ 6.6.3.3 Crater "ON" (with initial current))
CRATER-FILL ON (repeat)	Unavailable	After the main welding, you can weld by a crater current. During welding, welding is self-held even after the torch switch is turned off. Turning on the torch switch again switches the welding sequence to the crater treatment. During the crater treatment, the torch switch has to be held on. Turning off the torch switch during the crater treatment recovers the welding current, so that welding and crater treatment are switched over repeatedly by this ON/OFF operation. Pull up the welding torch to stop arcing. (☞ 6.6.3.4 CREATER-FILL ON (repeat))
	Available	In addition to the above, you can weld by the initial current before the main welding. (☞ 6.6.3.3 Crater "ON" (with initial current))
Arc Spot	-	Arc spot welding is enabled. (☞ 6.6.5 Arc spot time)

The welding modes above are switched over to CRATER OFF → CRATER ON → CRATER ON (repeat) → Arc Spot by turns every time the CRATER-FILL key is pressed.

TIPS

- **Even in the Crater-fill off mode, using the internal function (F45) enables to carry out the welding process in the initial current before the main welding, and the welding process in the Crater current after the main welding. (☞ 6.10.2.36 F45/F46/F47: Special crater sequence (effective/initial standard time setting/crater standard time setting))**

6.6.3.1 Crater "OFF"

Select "CRATER OFF" by the CRATER-FILL key.

- In synchronous to the ON / OFF operation of the torch switch, the welding starts / stops.

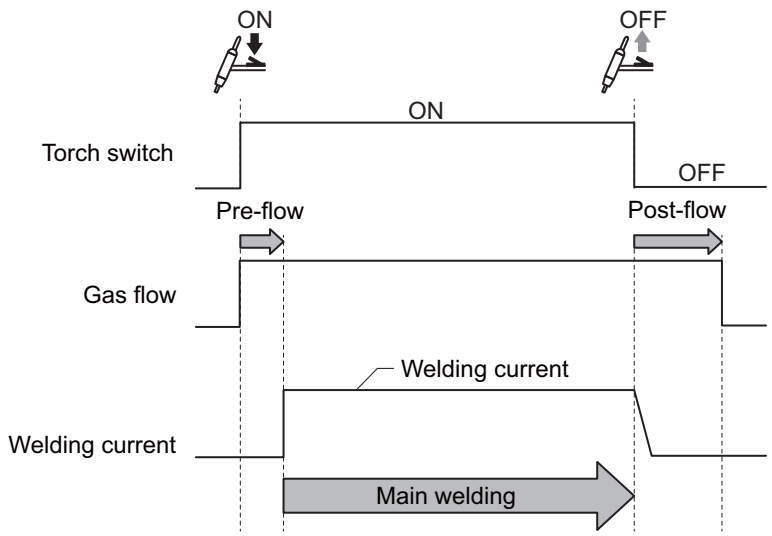

6.6.3.2 Crater “ON” (no initial current)

Select "CRATER-FILL ON" with the CRATER-FILL key to turn off the LED of the INITIAL CURRENT key.

- Carry out twice the ON / OFF operation of the torch switch and carry out the welding operation. In the second ON operation, the welding sequence is carried out by the crater current.
- The torch switch should remain depressed and held during the INITIAL and CRATER phrases.

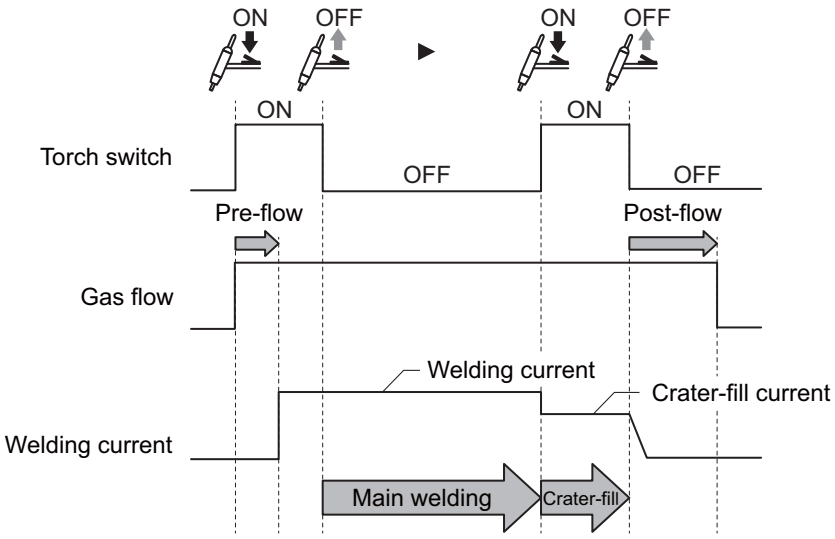

6.6.3.3 Crater “ON” (with initial current)

Select "CRATER-FILL ON" with the CRATER-FILL key to turn on the LED of the INITIAL CURRENT SELECT key.

- Carry out twice the ON / OFF operation of the torch switch and carry out the welding operation. The operation from the first ON to OFF enables the welding by the initial current, and the second ON operation enables the welding by the crater current.
- Even if the torch switch is switched off during welding, the signal will be self-hold. (The torch switch should remain depressed and held during the INITIAL and CRATER phrases.)

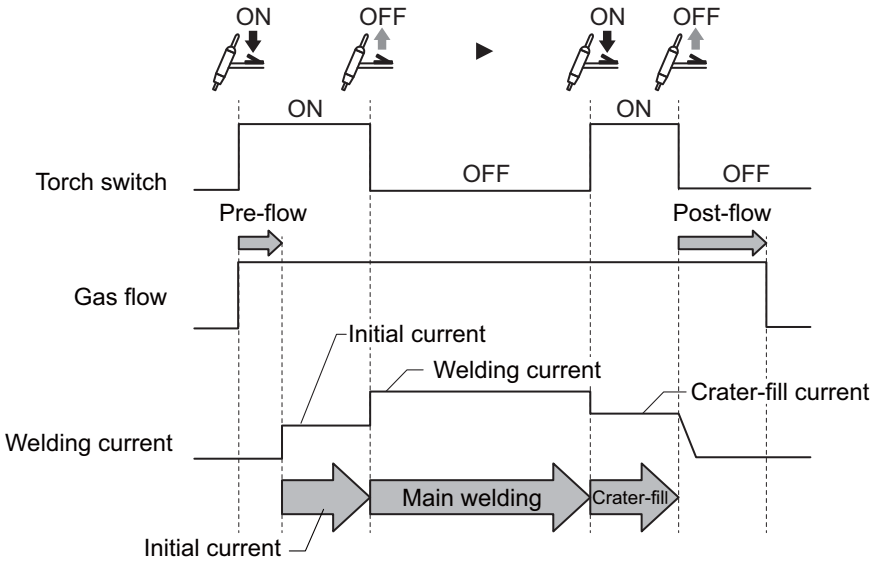

6.6.3.4 CREATER-FILL ON (repeat)

Select "CRATER-FILL ON (repeat)" with the CRATER-FILL key.

- During welding, welding is self-held even after the torch switch is turned off. Turning on the torch switch again switches the welding sequence to the crater treatment. During the crater treatment, the torch switch has to be held on. Turning off the torch switch during the crater treatment recovers the welding current, so that welding and crater (repeat) treatment are switched over repeatedly by this ON / OFF operation. Pull up the welding torch to stop arcing.
- In this repeat operation, arc may be broken by pressing the torch switch for a long time instead of pulling up the torch. For details, refer to "6.10 Setting Internal Functions".

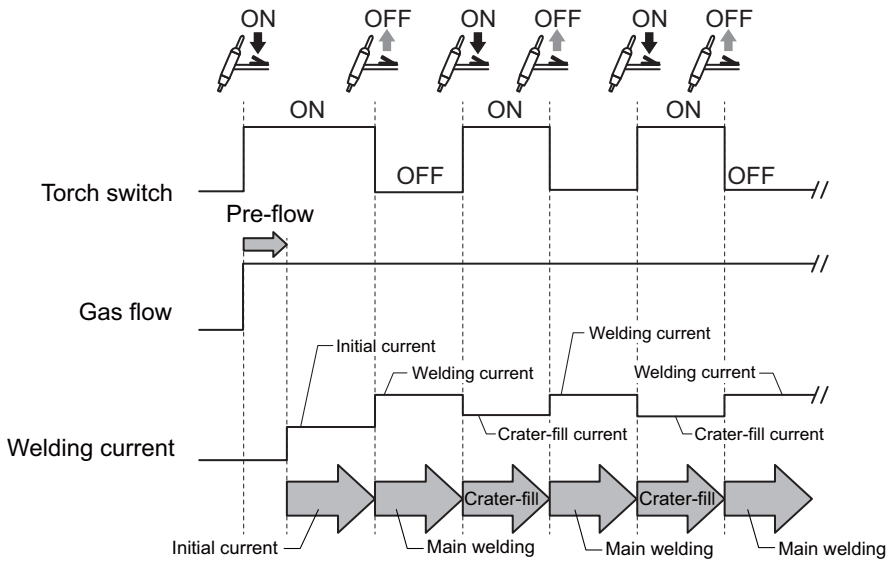

- Welding operation by combining functions
  The following types of welding operation are available by combining the crater filler and pulse slope functions.

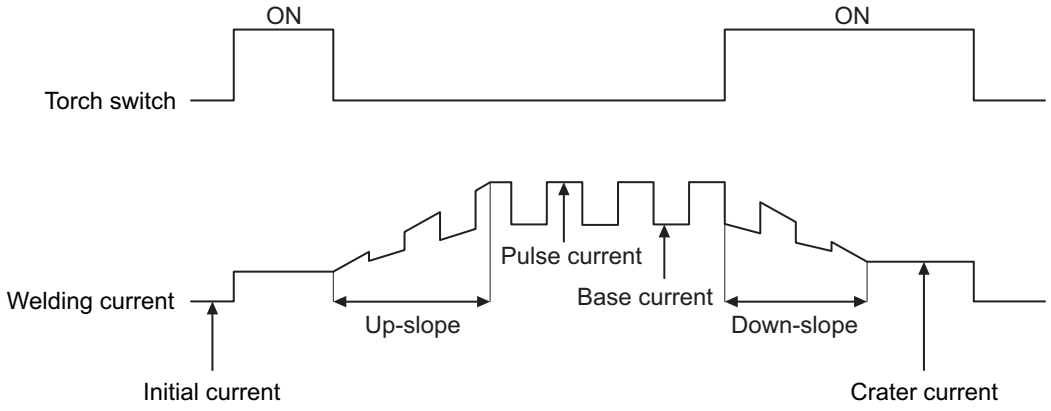

6.6.4 Slope setting

The selection of “Slope ON / OFF” is done with the SLOPE SELECT key in the CRATER-FILL ON, CRATER-ON (repeat) or ARC SPOT mode. The Slope ON mode is on when the LED at the upper left of the key is lit while the Slope OFF mode is on when the LED is not lit. In the Slope ON mode, the Up-slope time (only in the initial current ON mode) and the Down-slope time can be selected with the PARAMETER SELECT key. The SLOPE SELECT key is disabled in the CRATER-FILL OFF mode.

6.6.5 Arc spot time

This section explains the details of arc spot and torch switch operation.
Selecting "ARC SPOT" by the CRATER-FILL key allows the machine in the main mode.

- Once current flows with the torch switch turned on, the current continues to flow during the Arc Spot period (including the down-slope time in the Slope ON mode) even after the torch switch is turned off.
- The arc spot time is displayed on the left digital meter when pressing the SPOT TIME key, and is adjustable by the parameter adjustment knob.
- Arc can be broken even in the Arc Spot period when the torch switch is turned off in the Arc Spot mode. (☞ 6.10.2.2 F2: Chenge in sequence at arc spot)

Output current (Slope ON)	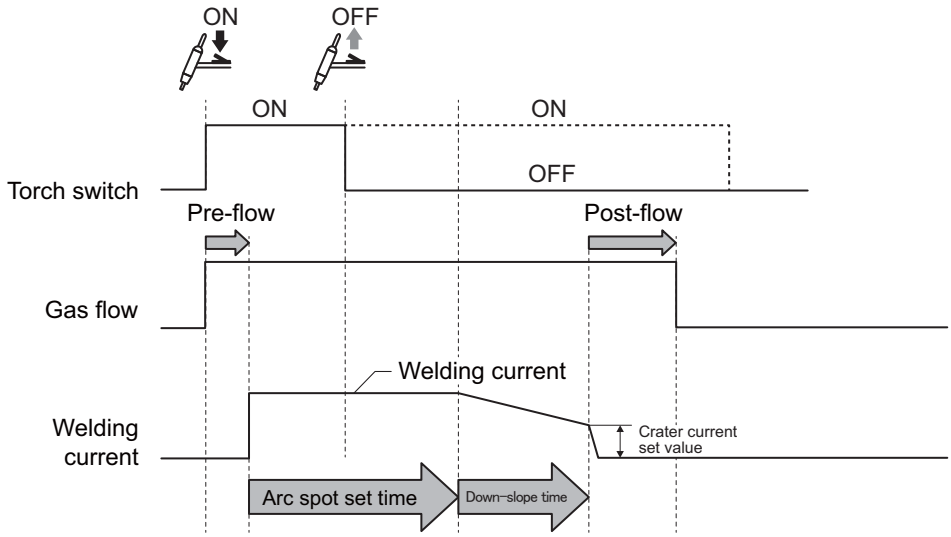 Adjustable parameters: Arc spot time, Down-slope time Welding current, Crater current
Output current (Slope OFF)	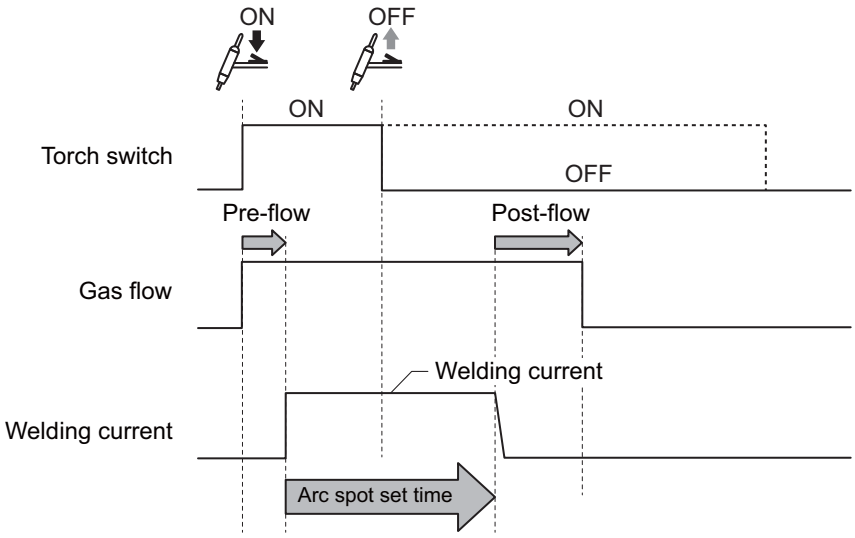 Adjustable parameters: Arc spot time, Welding current

6.6.6 Pulse setting

It is called "Pulse" to change the welding current periodically for the purpose to stabilize arc, control penetration shape, and control heat input. Pulse aims at solidifying arc and increasing arc stability in the large current period, and controls penetration shape and heat input by the small and large current ratio. Selection of Pulse ON / OFF is done with the PULSE SELECT key. The Pulse ON mode is on when the LED at the upper left of the key is lit while the Pulse OFF mode is on when the LED is not lit. In the Slope ON mode, the Pulse current and the Pulse frequency can be selected with the PARAMETER SELECT key. In addition, the base current will be the welding current.

	Major application	Timing chart
Pulse OFF	• Tack welding • Repetition of short welding • Sheet welding	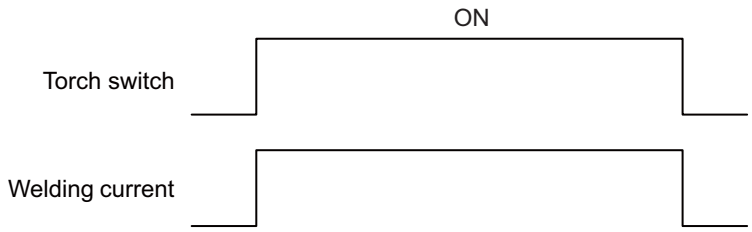
Pulse ON When pulse frequency is low (0.1 Hz to 15 Hz)	• Prevention of dripping in the penetration welding and hanging of vertical fillet bead	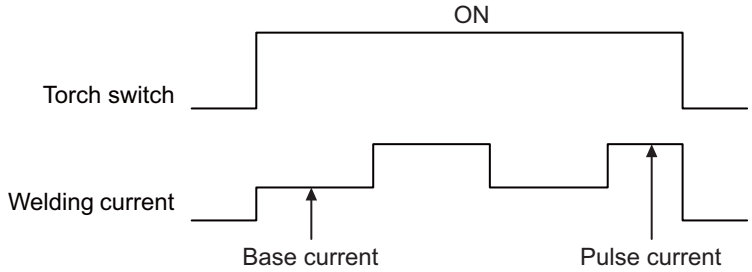
Pulse ON When pulse frequency is high (15 Hz to 999 Hz)	• Sheet welding	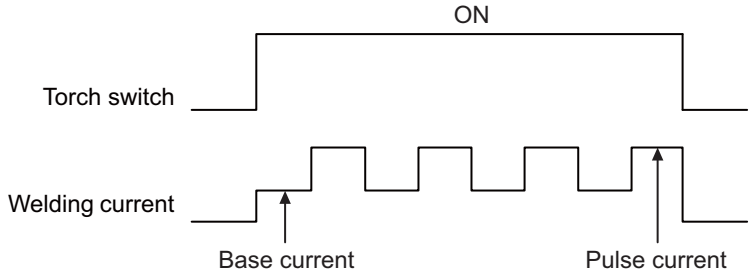

The standard pulse width is 50%. The pulse width can be changed by the internal function.
For details, refer to "6.10.2 Detailed information on internal functions".

NOTE

- **When the base current value in the pulse welding is set below 10 A, arc loss is likely to occur in some cases. Increase the base current value in such a case.**

6.7 Settings for AC TIG Welding and AC-DC TIG Welding

6.7.1 Functions of AC TIG welding and AC-DC TIG welding

AC TIG welding	This is a TIG welding method that takes full advantage of the bipolar characteristics of the "+" electrode which obtains cleaning action and the "-" electrode with less electrode wear. By making the polarity of the welding rod inverted (from plus to minus, from minus to plus) in a short period, this method takes advantage of bipolarity. AC TIG welding is mainly suitable for welding aluminum.
AC-DC TIG welding	This is a TIG welding method that periodically and alternately outputs AC period in which cleaning action is obtained and DC period in which deep penetration is obtained. AC-DC TIG welding is mainly suitable for automatic welding of aluminum.

6.7.2 Setting AC waveform

For AC TIG welding and AC-DC TIG welding, the following three output current waveforms can be selected with the AC WAVEFORM key. Select a waveform, taking advantage of the characteristics of each current waveform.
AC frequency and cleaning width are stored for each AC waveform.

Mode	Output current waveform		Characteristics
Standard	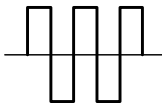	Outputs a rectangular wave current with the same peak value of positive polarity current and reverse polarity current.	Welding can be done in a wide range from thin to thick worksheet. Also, this mode is used most commonly since stable welding can be performed in the entire current range.
Hard	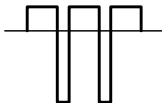	Outputs a rectangular wave current with a different peak value of positive polarity current and reverse polarity current.	You can obtain concentrated arc like DC TIG. It is effective for fillet weld of thin worksheet and first layer of groove weld. The electrode wear is the least among three modes, but the arc sound is large.
Soft	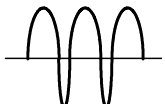	Outputs a sinusoidal current with the same peak value of positive polarity current and reverse polarity current.	Soft arc is obtained. It is effective for butt welding of thin worksheet. Also, the arc sound is small. The set value of welding current is up to 200 A.

NOTE

- **When the welding current reaches 200 A or more in the hard mode, the bead width becomes wider than the cleaning width, which interrupts creating of beautiful beads. Therefore, the hard mode is suitable for the welding current of 200 A or less.**

6.7.3 Setting AC frequency

Set the AC frequency for AC TIG welding and AC-DC TIG welding.
Increasing the AC frequency will increase the concentration of arc while lowering the arc will increase the spreading of arc.

When either one of the initial condition, welding condition and crater condition is selected, press the AC FREQUENCY key. The upper left LED is illuminated and the set value is displayed on the right digital meter with the Hz LED illuminated. Also, the standard value is displayed on the left digital meter.

The AC frequency can be adjusted with the parameter adjustment knob in this condition, Setting range is within 30 to 500 Hz.
Pressing the AC FREQUENCY key again or the PARAMETER SELECT keys switches to the parameter setting just before the adjustment.

The standard value of AC frequency for each AC waveform is as follows.
Standard, Soft: 70 Hz
Hard: 100 Hz

6.7.4 Setting cleaning width

Set the strength of the cleaning action during AC TIG welding.

When either one of the initial condition, welding condition and crater condition is selected, press the CLEANING WIDTH key. The upper left LED is illuminated and the set value is displayed on the right digital meter. (At this time, all the LEDs of the unit turn off.)

The cleaning width can be adjusted with the parameter adjustment knob in this condition, Setting range is within 0 to ±20.
Pressing the CLEANING WIDTH key again or the PARAMETER SELECT keys switches to the parameter setting just before the adjustment.

The standard set value of the cleaning width is "0", and the cleaning width becomes narrower in minus direction and the minimum set value is "-20". Also, the cleaning width becomes larger in the plus direction and the maximum set value is "20".

The following shows the relations among the cleaning width setting, welding result, and electrode wear degree.

Minus direction	Cleaning width setting	Plus direction
Narrow	Cleaning width	Wide
Deep	Penetration depth	Shallow
Little	Electrode wear	Much
Small	EP ratio	Great

EN refers to the period during which the base material is the positive electrode (+) and the torch is the negative electrode (-). EP means the period during which the base material is the negative electrode (-) and the torch is the positive electrode (+).

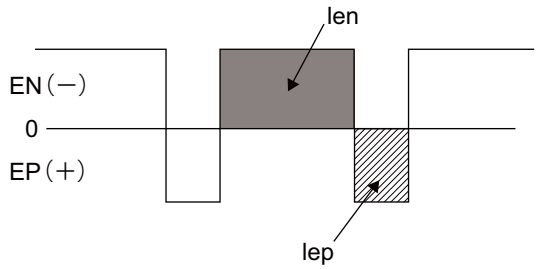

EP ratio is the current ratio (ratio of area) of EP polarity in one AC cycle expressed in a percentage and is defined by the following formula.

$$\text{EP ratio} = \frac{lep}{len + lep} \times 100\%$$

If you adjust the cleaning width, the EP ratio changes by 1% against the operation amount "1". The standard value of the EP ratio (the value at the center position "0") differs for each AC waveform, and the maximum value and the minimum value that can be set as EP ratio also differ.

While setting the cleaning width, you can change the value displayed on the digital meter from the standard value to the EP ratio. (☞ 6.10.2.15 F15: Switchover of cleaning width display)

The standard EP ratio for each AC waveform, the maximum value and minimum value you can set are as shown in the table below.

AC Mode	Standard value	Maximum value	Minimum value
Standard	30%	50%	10%
Soft	30%	50%	10%
Hard	20%	30%	5%

6.7.5 Setting AC-DC switchover frequency

Set the AC-DC switchover frequency for AC-DC TIG welding.

When either one of the initial condition, welding condition and crater condition is selected, press the AC-DC SWITCHOVER FREQUENCY key. The upper left LED is illuminated and the set value is displayed on the right digital meter with the Hz LED illuminated.
The AC-DC switchover frequency can be adjusted with the parameter adjustment knob in this condition. Setting range is within 0.1 to 50 Hz.

Pressing the AC-DC SWEITCHOVER FREQUENCY key again or the PARAMETER SELECT keys switches to the parameter setting just before the adjustment.

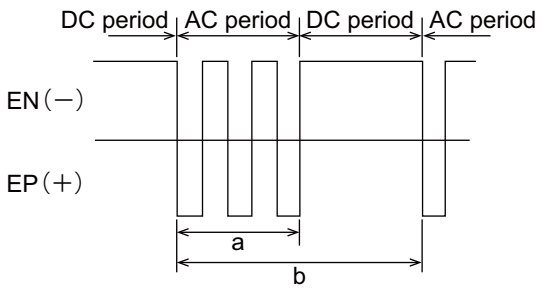

$$\text{AC-DC switchover frequency (Hz)} = \frac{1}{b\ (\text{sec.})}$$

The relations between the AC-DC switchover frequency setting and the filler wire insertion interval are as shown in the table below.

When frequency is low	AC-DC switchover frequency setting	When frequency is high
When insertion interval is long.	Filler wire insertion interval	Insertion interval is short.
The ripple interval becomes long.	Bead ripple	Ripple interval becomes short.
Suitable for low-speed welding.	Welding speed	Suitable for high-speed welding

Insert filler wire manually or automatically.

Manual insertion	When the AC-DC switchover frequency is 0.5 Hz to 2 Hz, the filler wire is inserted synchronized with the AC period. Since the arc sound is large in the AC period and it is small in the DC period, insert the filler wire using the change of the arc sound as a guide.
Automatic insertion	When inserting the filler wire automatically, set so that the filler wire is intermittently fed synchronized with the AC period.

The standard AC ratio is 70%. AC ratio is the ratio of AC period in one cycle of AC-DC period, expressed by a percentage, and is defined by the following formula.

$$\text{AC ratio (\%)} = \frac{b}{a} \times 100$$

Also, the AC ratio can be changed by the internal function. (☞ 6.10.2.14 F14: AC ratio)

6.8 Adjusting current with torch switch

The welding current may be increased or decreased by the torch switch operation. Turn ON / OFF this function with the TORCH CURRENT ADJUSTMENT key. The LED at the upper left of the key is lit when this function is "ON".

- "ON": Enters the CRATER-FILL ON mode, and increases / decreases the welding current in the welding condition (during start input holding) by single-clicking / double-clicking of the torch switch. When set to "ON", the LED of "CRATER-FILL ON" of the CRATER-FILL key flashes. Set the current increase / decrease value by the internal functions F11 (single-clicking) and F12 (double-clicking).
- "OFF": This function is disabled.

TIPS

- **When this function is set to "ON", the CRATER-FILL ON setting is automatically selected, disabling other welding modes. (The CRATER-FILL key does not work.)**
- **For each single-clicking and double-clicking, respective value can be set for the current increase and decrease.**
- **Single-clicking or double-clicking operation should be done within 0.3 seconds.**
- **In order to transit to the crater process, press the torch switch for 0.3 seconds or more.**

Example:
The operation flow will be as follows when Crater ON, Initial current OFF, Welding current 100 A, Crater current 60 A, "-10" for F11 and "20" for F12 are set.

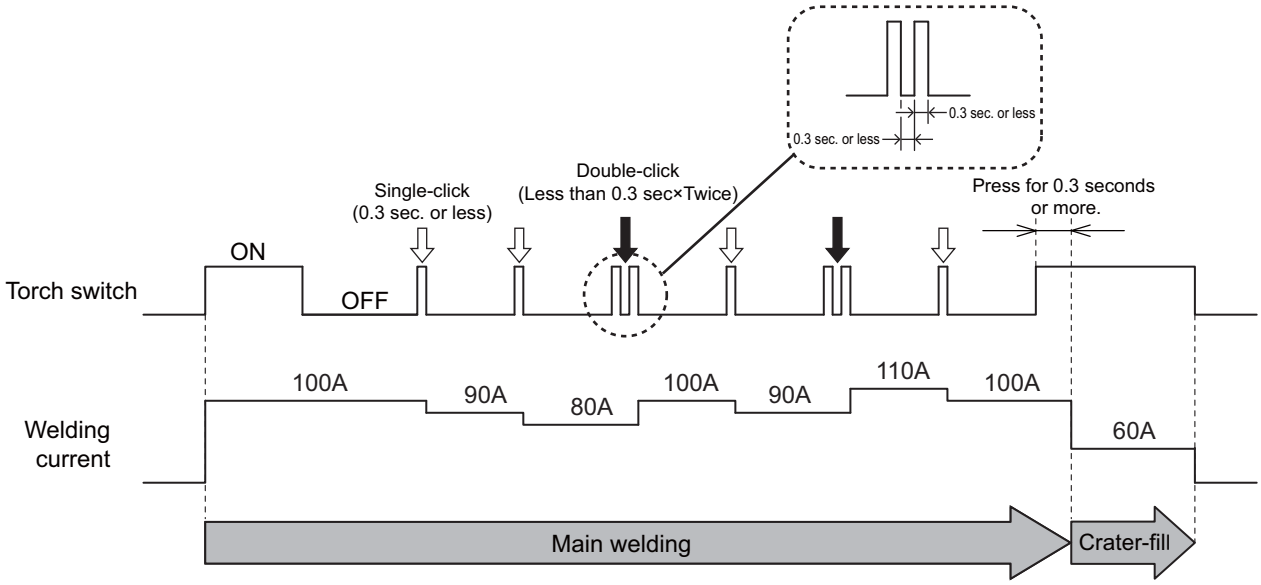

- This function cannot be used in the following cases.
  - Internal function F44 (Loading welding condition with remote control) is set to "ON" (enabled).
  - Internal function F45 (Special crater sequence) is set to "ON" (enabled).
  - One of Internal functions F29 to F32 (External input terminal setting) is set to either "2" (Start) or "3" (Loading welding condition).

6.9 Welding Setting Guide

The Welding Setting Guide is a function in which the welding machine automatically determines appropriate welding conditions such as (Welding current, Initial current (when initial current is selected), Crater current (when CRATER-FILL ON is selected), Pre-flow time and Post-flow time, and Up-slope time and Down-slope time) by selecting the electrode diameter, the base metal material, the weld joint shape, and the base metal plate thickness.

NOTE

- **In the Welding Setting Guide, you cannot select the pulse welding of mild steel.**
- **When the analog remote control is connected, the Welding Setting Guide cannot be used.**

6.9.1 Settings of Welding Setting Guide

This section explains how to set the Welding Setting Guide.

STEP

1. **Press and hold the WELDING SETTING GUIDE key for one second or more.**

   ⇒ The LED of the WELDING SETTING GUIDE key turn on in green.

   ⇒ The setting item No. is displayed on the left digital meter.

   ⇒ The set value set to the setting item No. is displayed on the right digital meter.

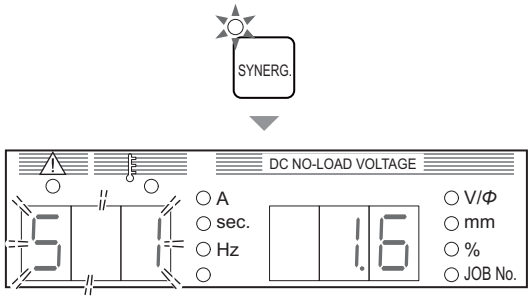

2. **Using the parameter adjustment knob and the PARAMETER SELECT key, select an intended setting item No.**

   - Pressing the PARAMETER SELECT key makes the left digital meter lit so that you can change the setting item No.
   - Change the setting item No. by turning the parameter adjustment knob. (Example: "S1" → "S2" → "S3" → "S4")
     S1: Electrode diameter, S2: Material, S3: Joint, S4: Plate thickness
     (☞ 6.9.2 Details of Welding Setting Guide)

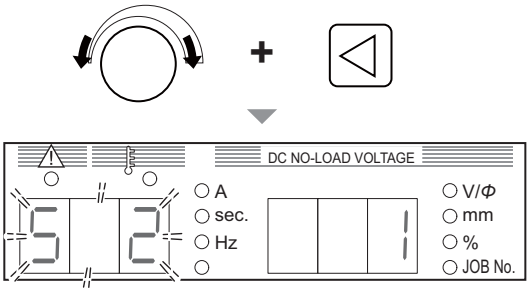

3. **Change the set value by using the parameter adjustment knob and the PARAMETER SELECT key.**

   - Pressing the PARAMETER SELECT key makes the right digital meter lit so that you can change the set value.
   - Turning the parameter adjusting knob allows you to change the set value of the set setting item No.

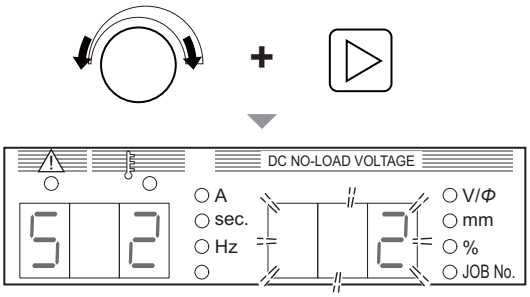

4. **Repeat the operations in Steps 2 and 3 to set the set values of setting item Nos. (S1-S4).**
5. **Tap the WELDING SETTING GUIDE key.**

⇒ Appropriate each parameter value the welding machine has determined based on the set values is displayed on the digital meter and the LED of the WELDING SETTING GUIDE key turn on in red.

⇒ Check the contents of the welding conditions by pressing the PARAMETER SELECT key.

TIPS

- **Each welding condition can be adjusted as needed with the parameter adjustment knob.**

6.9.2 Details of Welding Setting Guide

This section explains details of the welding control items.

6.9.2.1 S1: Electrode diameter

The electrode diameter can be set by setting the left digital meter to "S1". Select one of Φ1.6, Φ2.4, Φ3.2, Φ4.0, Φ4.8, Φ5.6 and Φ6.4.

6.9.2.2 S2: Base metal material

The base metal material can be set by setting the left digital meter to "S2". Material is set by number as shown on the table below.

Material No.	Base metal material
1	Mild steel
2	Stainless steel
3	Aluminum

6.9.2.3 S3: Weld joint

The welded joint shape can be set by setting the left digital meter to "S3". The joint shape is set by number as shown on the table below.

Joint No.	Welded joints
1	T fillet welded
2	Butt welding
3	Lap welded
4	Corner welded

⚠ CAUTION

- **This setting is fixed to "3. Lap welded" when Arc Spot is selected.**

6.9.2.4 S4: Base metal plate thickness

The plate thickness of the base metal can be set by setting the left digital meter to "S4". The plate thickness can be set in 0.1 mm unit and the setting range is determined as follows depending on the set base metal material and welded joint.

	Base metal material					
	Mild steel		Stainless steel		Aluminum	
Welded joint	Plate thickness lower limit (mm)	Plate thickness upper limit (mm)	Plate thickness lower limit (mm)	Plate thickness upper limit (mm)	Plate thickness lower limit (mm)	Plate thickness upper limit (mm)
T fillet welded	1.2	6.0	1.2	6.0	0.6	6.0
Butt welded	0.8	6.0	0.8	6.0	0.6	6.0
Lap welded	0.8	6.0	0.8	6.0	0.6	6.0
Corner welded	0.5	6.0	0.6	6.0	0.6	6.0
When Arc Spot is selected	0.3	2.0	0.3	2.0	0.3	2.0

6.9.2.5 Condition of Welding Setting Guide at Arc Spot

The Welding Setting Guide assumes the condition where the electrode tip is set in a position 2 mm off the nozzle, fully overlapped in close contact with the base metal plate.

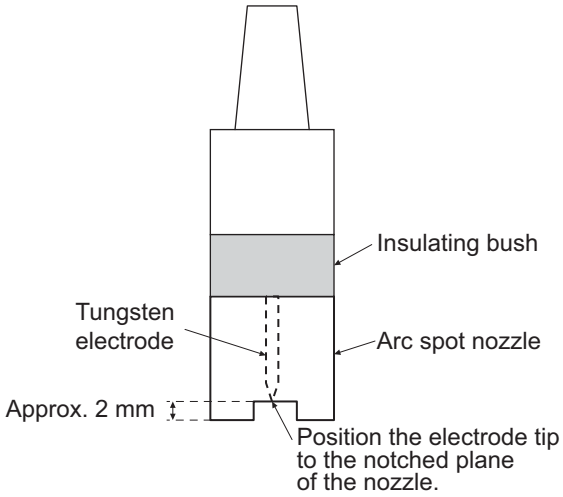

6.9.3 Revising and exiting Welding Setting Guide

This section explains how to revise the settings of and exit the Welding Setting Guide.

- Revising the settings of the Welding Setting Guide
  - Tap the WELDING SETTING GUIDE key.

    ⇒ The LED of the WELDING SETTING GUIDE key turn on in green.
- Exiting the Welding Setting Guide
  - Press and hold the WELDING SETTING GUIDE key for one second or more.

    ⇒ The LED of the WELDING SETTING GUIDE key turn off.

6.9.4 Affixing guide plate for welding settings

Affix the guide plate for welding settings as shown below.

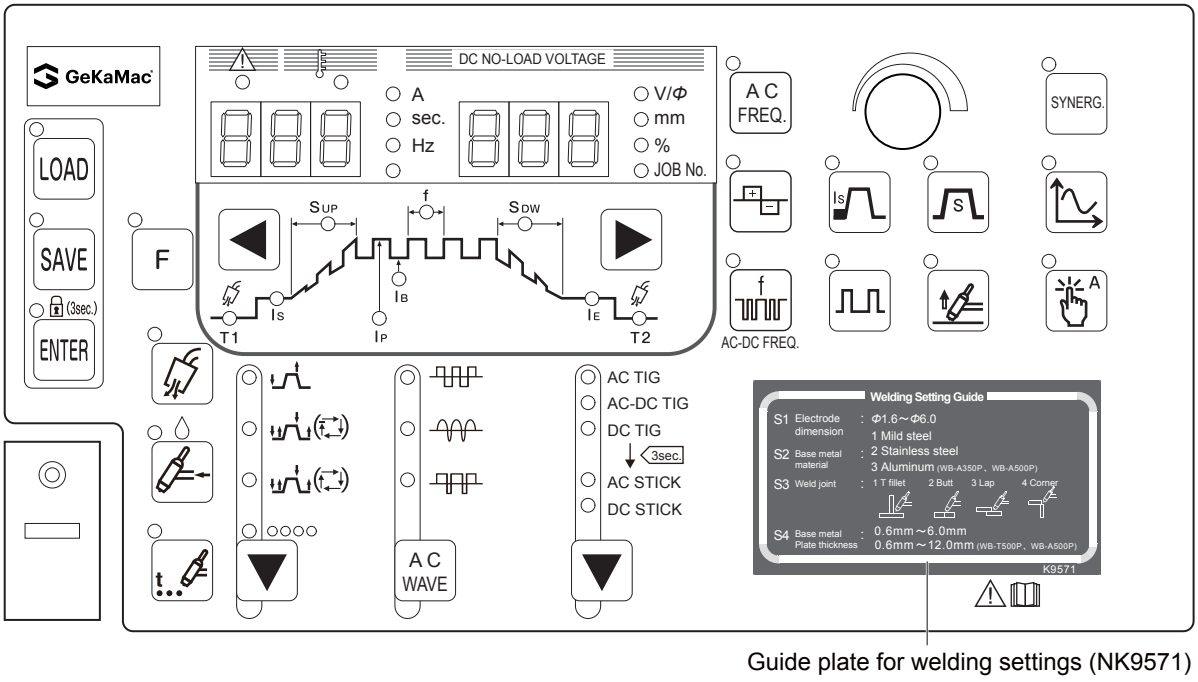

Guide plate for welding settings (NK9571)

6.10 Setting Internal Functions

This section explains how to set the internal functions with the details.
The internal functions can be customized according to the using environment of the customer for further convenient use of the welding power source.

6.10.1 Setting procedure

This section explains how to set the internal functions.
Details of internal function (☞ 6.10.2 Detailed information on internal functions)

TIPS

- The internal function is activated at the poin t when the setting value is changed. To change the set values of internal functions, ensure that there is no mistake in the function No. as well as in the function setting.

STEP

1. **Depress the F (Function) key for one second or more.**

   ⇒ The function No. is displayed on the left digital meter in a flashing mode.

   ⇒ The setting value of each function No. is displayed on the right digital meter.

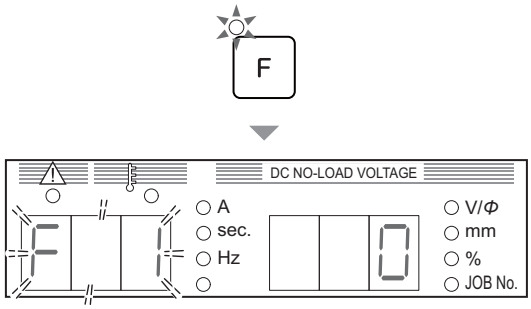

2. **Turn the parameter adjustment knob, to display the function No. to set.**

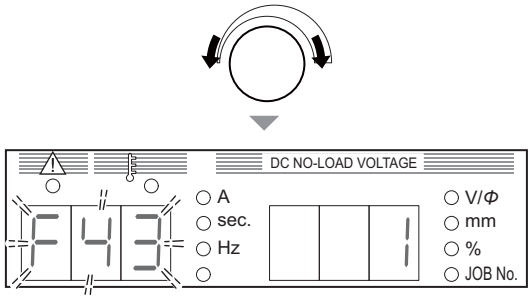

3. **Press the F (Function) key again.**

   ⇒ The display on the right digital meter changes to a flashing mode.

4. **Turn the parameter adjustment knob, and change the setting value.**

   ⇒ The set value is activated as it is changed.

   ⇒ Pressing the F (Function) key enables to return the display to the status described in step 1.

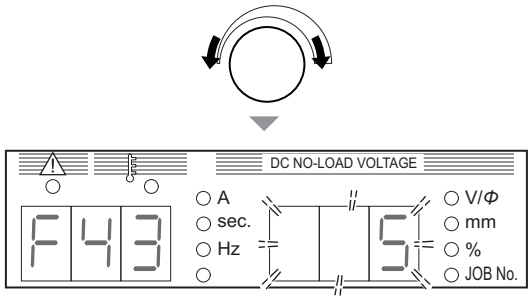

5. **Depress the F (Function) key for one second or more.**

   ⇒ The setting of internal function completes, and the display returns to a normal state.

6.10.2 Detailed information on internal functions

This section explains the detailed information of internal functions in the order of function No.

6.10.2.1 F1: Fine-adjustment of starting current

Fine-adjusts the starting current at the time of TIG welding start.
The output value of the starting current can be adjusted in the range of 10 to 200%, assuming the standard starting current as 100%.

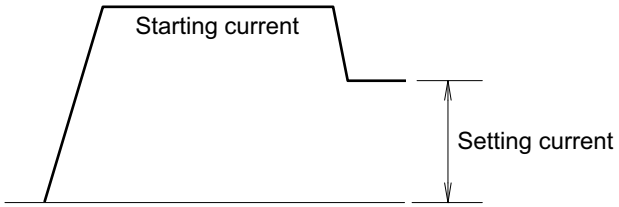

- Starting current fine-adjustment value display / Absolute value display
  When this function is being set, the "Fine-adjustment value" or the "Absolute value" is displayed on the right digital meter. Every pressing the [◀] or [▶] key switches over the display with each other. You can check which value is displayed by the LED of the unit.
  - When the % LED is ON: Fine-adjustment value is displayed.
  - When V / Φ LED is ON: Absolute value (a value with the adjustment value increased to / decreased from the standard value) is displayed.
- Fine-adjustment guide
  - Decrease the starting current if a hole opens at the time of welding start.
  - Increase the starting current if it is difficult to start welding.

TIPS

- **The upper limit of the starting current is 350 A, while the lower limit is DC 2A/AC 4A. Fine adjustment cannot be made outside these limit values.**

6.10.2.2 F2: Chenge in sequence at arc spot

This function can break arc even in the Arc Spot period when the torch switch is set to "OFF" in the Arc Spot mode.
When this function is set to "ON" (enabled), hold the torch switch ON during the Arc Spot process.

- [ON]: This function is enabled so that arc is broken even in the Arc Spot period when the torch switch is set to "OFF".
- [OFF]: This function is disabled.

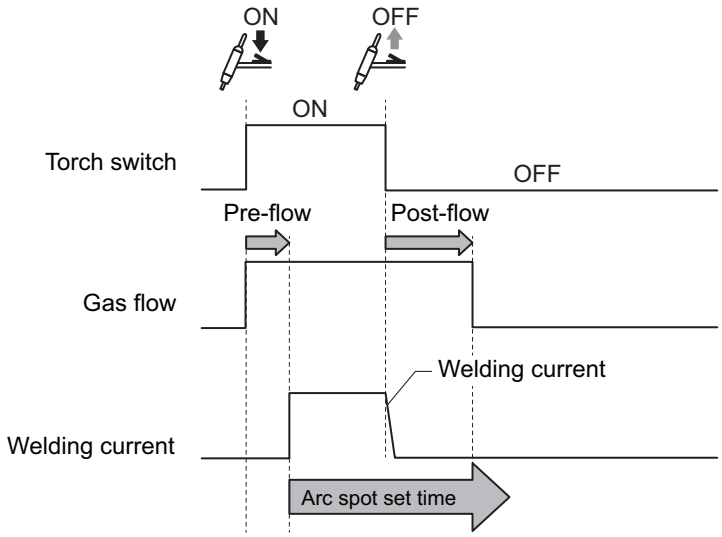

6.10.2.3 F3: Chenge in sequence at CRATER-FILL ON (repeat)

In the CRATER-FILL ON (repeat) mode, welding current and crater current can be switched over with each other by tapping the start switch. Press the start switch for a long time to stop welding.

- [ON]: This function is enabled.
- [OFF]: This function is disabled.

Example:
The welding flow will be as follows when the Initial welding current is set to 80 A, the Main welding current to 100 A, and the Crater current to 60 A.

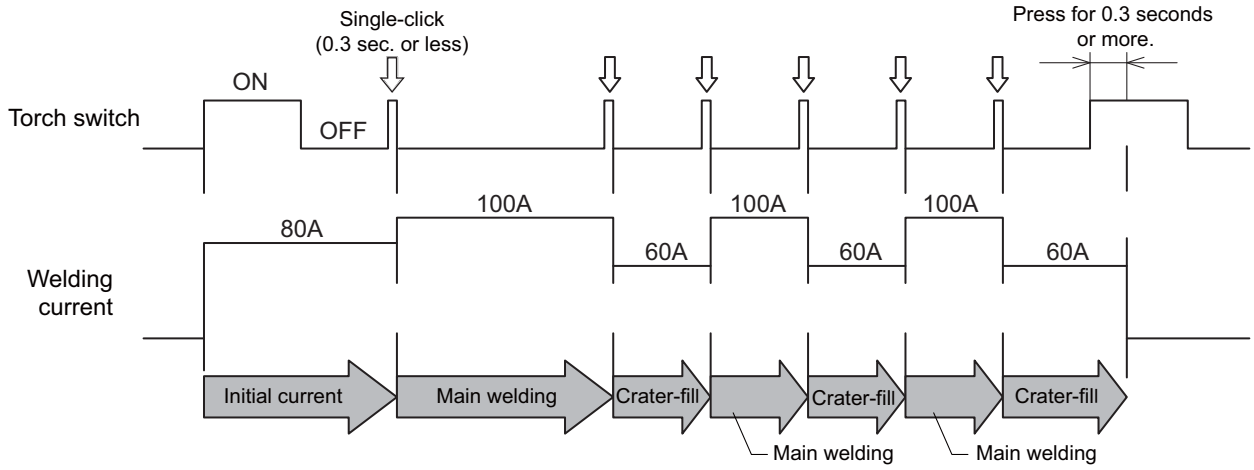

6.10.2.4 F4: Auto/Manual mode

When using the welding power source with a robot and/or automated machine, the I/O (interface) of the welding power source can be set to be suited for the application.
In the settings "0" to "2", the welding sequence will be as follows. The settings "3" and "4" are for the modes only for our robot. For details, refer to the instruction manual of our robot controller.

Parameter	Setting		
	0 (Manual mode)	1 (Automatic machine 1)	2 (Automatic machine 2)
Cancellation of operation stop	After short-circuiting 3-4 (operation stop terminals) on the external connection terminal block TM3, turn on the power again. (*2)	Short-circuit the operation stop terminals (3-4) on the external connection terminal block TM3. (*2)	
Welding current/Pulse current	Set on the control panel or on the remote control.	Set by the command voltage from the outside. (*1)	Set on the control panel or on the remote control.
Error reset	After removing the cause of error, the power is restored.	After removing the cause of error, the power is restored. Or open/short-circuit the deactivated terminal pins [3]-[4] of the external connection terminal block TM3. (*2)	

*1: If an external command voltage is input, it should be input to the terminal pins ([2]-[3], [2]-[4]) of the remote control receptacle as shown in the below figure.
Relationship between input and output is as the charts provided in "F5: Maximum external command voltage".
(☞ 6.10.2.5 F5: Maximum external command voltage)

Ensure that the command voltage is input at least 100 ms before the start signal is input.
Use the external power source with current capacity of 0.5 mA or more.

⚠ CAUTION

- **Supply voltage of 0-15 V to E1 and E2.**
  Supplying voltage over 15 V may damage the control circuit of the welding power source.

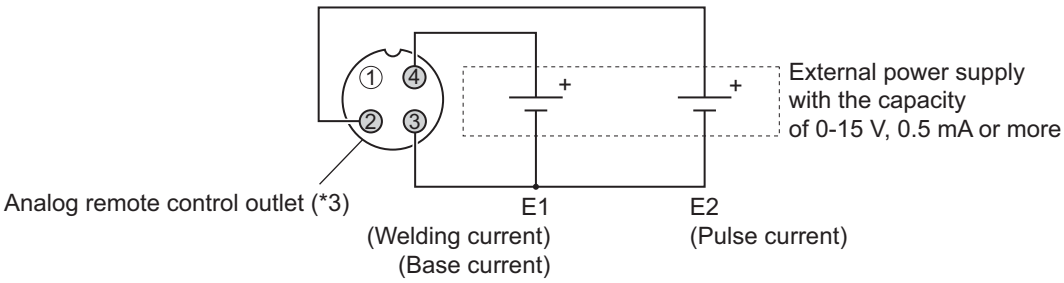

*2: For the details of external connection terminal block; (☞ 4.6.1 Connection with external equipment)
*3: For the applicable plug of analog remote control receptacles: See specification DPC25-4A/Part No. 4730-005

6.10.2.5 F5: Maximum external command voltage

Set the maximum value of the voltage command inputted from the outside when using the welding power source by setting the internal function F4 (Auto / Manual mode) to "1" (Automatic machine 1 mode).
Select one of 10 V, 12 V, 14 V and 15 V.

The graphs below shows the relations among the voltage command and the welding (base) current / Pulse current
Use the following table as a guide. Due to the length and layout of the wiring such as external input line (command voltage line) and the base material side / torch side cables, the actual output may differ from the graphs below.)

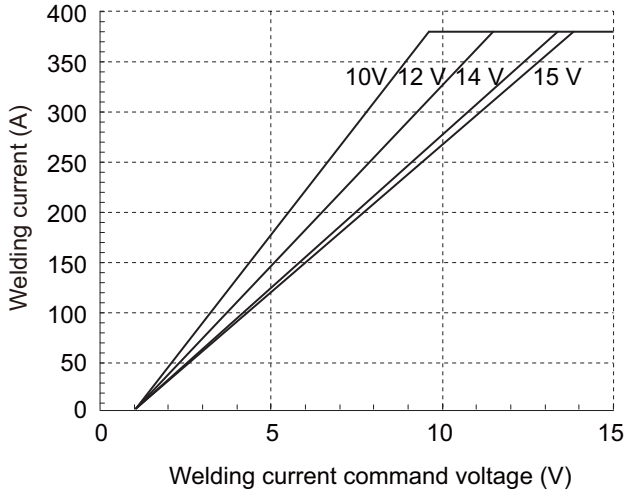

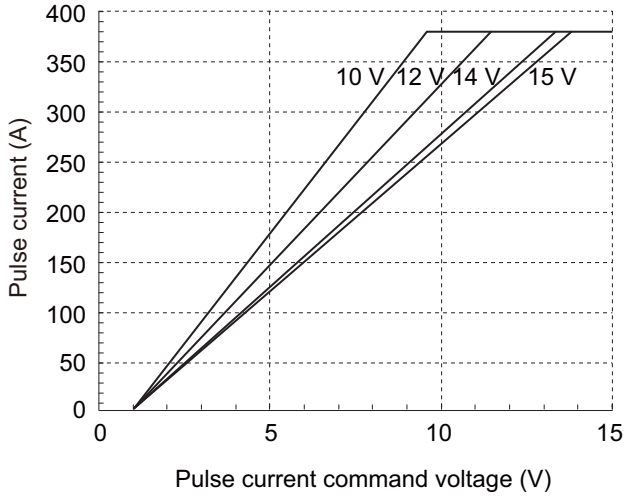

6.10.2.6 F6: Hazard reducing function

The voltage reducing function is used for AC STICK welding and DC STICK welding. This is a safety function to reduce the risk of an electric shock to workers by limiting the no-load voltage of the welding power source to a low voltage when welding is not performed.
Therefore, if the welding power source is used in an elevated or narrow workplace, use it with the hazard reducing function set to "ON" (Use).
The setting at the shipment from our factory is "ON" (Use).

- [ON]: This function is enabled.
- [OFF]: This function is disabled.

NOTE

- **When the welding power source is connected with Model K-300 (external type voltage reducing device), set this function to "OFF".**

6.10.2.7 F7: Pulse peak ratio adjustment

This function sets the ratio of the pulse width in one cycle during pulse output.
Set the peak time (pulse width) to the pulse cycle shown in the figure below by the percentage.

- Setting range of pulse width percentage: 5-95%

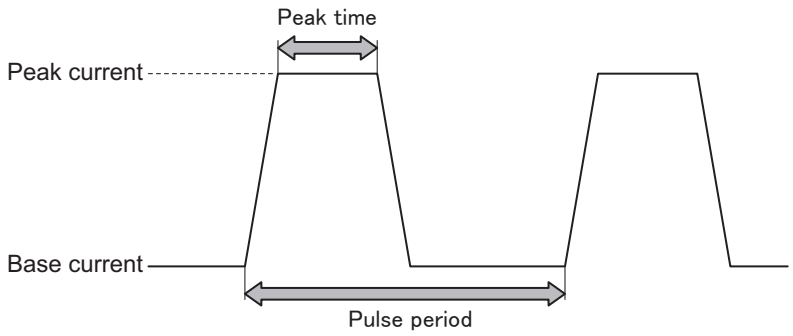

6.10.2.8 F8: Welding result display time

Set the time period for the output current and voltage to be displayed on the left / right digital meters in a flashing mode after the completion of welding. Set the display time in the flashing mode.
The value of display time is the average value for one second immediately before the completion of welding.

- Setting range of welding result display time: 0 to 60 [sec]

6.10.2.9 F9: Analog remote control scale

Change the setting of the scale plate of analog remote control when using the optional analog remote control.

Rated output current of welding power source	Applicable scale and scale plate
350 A	400/300/200/100

- Scale plates are available separately for 400 A, 300 A, 200 A and 100 A. Change the scale plate according to the selected scale of analog remote control. (☞ 6.11 Operation of Analog Remote Control (Optional))
- When using the remote control in a low current region, set the scale plate to 100A.

6.10.2.10 F10: Analog remote control upper limit settings

This function sets the upper limit value (the value when the knob is turned fully clockwise) of the setting range of the welding current and the pulse current that can be adjusted by the analog remote control. When welding is going to be performed in the low current range, it will be easier to fine-adjust the current if the upper limit value is lowered by this function when it is hard to fine-adjust with the knob of the analog remote control.
Setting range will be within 1 to 380A. (In the AC STICK welding mode or the DC STICK welding mode, the upper limit of the current setting will be 250 A even when a value over 250 A is set.)
The setting at the shipment from our factory is 380 A.

6.10.2.11 F11: Current increase and decrease by single-clicking

This function sets the current increase or decrease value by single-clicking when the welding current is increased or decreased by the torch switch operation. This function is available when the TORCH CURRENT ADJUSTMENT key is set to "ON".

- Set the current increase / decrease value by single-clicking in the range of -100 to 100 A.

6.10.2.12 F12: Current increase and decrease by double-clicking

This function sets the current increase or decrease value by double-clicking when the welding current is increased or decreased by the torch switch operation. This function is available when the TORCH CURRENT ADJUSTMENT key is set to "ON".

- Set the current increase/decrease value by double-clicking in the range of -100 to 100 A.

6.10.2.13 F13: Switchover of current adjustment operation at Pulse ON

This function is enabled when both PULSE SELECT key and TORCH CURRENT AJUSTMENT key are set "ON". The operation executed by clicking the torch switch is selected from the following options. The setting at the shipment from our factory is "1"

- [1]: Changes the pulse current only without changing the base current by click operation.
- [2]: Changes both the pulse current and the base current by the same current value (set by F12 and F13) by click operation.

6.10.2.14 F14: AC ratio

You can set the AC ratio in AC-DC TIG mode.
The AC ratio is set to 70% at the time of shipment.

- AC ratio setting range: 10% to 90%

6.10.2.15 F15: Switchover of cleaning width display

When setting the cleaning width, you can select either "EP ratio" or "Strength of cleaning action" as the value to display on the right digital meter. When "EP ratio" is selected, the "%" LED of the unit LEDs is illuminated. Also, the standard value is displayed on the left digital meter.

- [ON]: Shows the EP ratio.
  EP ratio setting range: 10 to 50% (AC waveform: Standard, Soft)
  5 to 30% (AC waveform: Hard)
- [OFF]: Displays the strength of cleaning action.
  Setting range of strength of cleaning action: - 20 to 20 (AC waveform: Standard, Soft)
  - 15 to 10 (AC waveform: Hard)

6.10.2.16 F16: Adjustment of pulse waveform

When the pulse is set to “ON”, the pulse welding waveform can be changed.

Setting	Function name	Contents
0	Standard pulse	Switchover between pulse current and peak current is the fastest.
1	Soft pulse	Arc becomes softer than the standard pulse. Welding sound is reduced by smoothing current change. When compared with the standard pulse of the same average current, melting down is less likely to occur and is suitable for welding a thin worksheet.
2	Output stable pulse	This is a stable pulse that easily maintains the average current of the pulse current and the base current even if the pulse frequency is raised.

6.10.2.17 F17: Switchover of memory condition interlocking function (when connected with the filler control device)

When connected with the filler control device (HC-71D), welding condition memory function of the welding power source and the wire feed condition memory function of the filler control device can be interlocked, shearing the memory condition number.
For example, when loading the condition number 2, not only No.2 condition in the welding condition memory but No.2 condition in the feed conditions memory of the filler control device memory are loaded.

- [ON]: This function is enabled.
- [OFF]: This function is disabled.

6.10.2.18 F19: Switching alarm setting

When alarm occurs, the output of welding power source can be stopped.

Yet for some alarm codes, it is possible to continue welding even if the alarm level is detected, which may sometimes cause the alarm display to be ignored. Using the alarm setting switch function ensures to stop the output from the welding power source.

- [ON]: any alarm detection stops the output of welding power source.
- [OFF]: alarm detection does not stop the output of welding power source.

Means to reset alarms is the same as those for errors, including restoration of the power. (☞ 9.1 Action in Case of Error)

6.10.2.19 F20: Low input voltage detection level

Set the low input voltage detection level on the primary side. When the input voltage is lower than the set value, an error code is displayed.
Set the value in the range of 260 to 380 V.

TIPS

- **The factory default setting is 320 V. However, the specification of input voltage as welding power source is the range of 340 to 460 V. If input voltage is lower than this range, it may affect welding performance.**

6.10.2.20 F21: Maximum cooling fan operation

The cooling fan can be rotated at the maximum rotation speed at all time.

- [ON]: The cooling fan rotates at the maximum rotation speed at all time. Even when it is set to [ON], ensure not to exceed the specified duty cycle. (☞ 2.1.3 Rated duty cycle)
- [OFF]: The cooling fan rotates in a control mode (power-saving operation) due to the temperature detection inside the welding power source.
  This mode is effective in saving power consumption and preventing suction of extra powder dusts.

6.10.2.21 F22: Operation sound switching

Set the operation sound not to be emitted.

- [ON]: Pressing any key on the operation panel enables to sound the operation sound.
- [OFF]: Pressing any key on the operation panel does not enable to sound any operation sound.

6.10.2.22 F23: Sleep mode switching time

When the welding power source is not operated for a fixed period of time, it can be turned into the sleep mode.

- [0]: disables the function.
- [1] to [10]: enables the function.
  Set the transition time to the sleep mode in the range of 1 to 10. During the sleep mode, power consumption is reduced.
  - In the sleep mode, the dot at the first digit on the left / right digital meters flashes. All the other displays on the operation panel are turned OFF.
  - Any operation during the sleep mode restores the condition to the previous state.

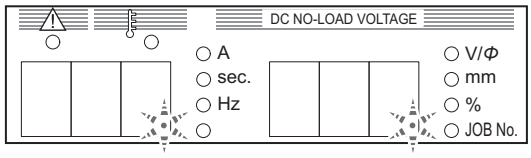

6.10.2.23 F24: Operation time of water-cooled pump

Sets the operation time of water-cooled pump after welding ends.
When the water-cooled welding torch is used, the water-cooled pump operates to cool the welding torch as the welding ends. The operation time of water-cooled pump at this time can be set:

- Setting range of water-cooled pump operation time: 20 to 60 min.
- [ON]: Water-cooled pump is always ON

6.10.2.24 F25 to F28: External output terminal setting

Set the function of external output terminals.

- F25: Sets the function of OUT-EXT1 (3-4) on the external connection terminal block TM4.
- F26: Sets the function of OUT-EXT2 (5-6) on the external connection terminal block TM4.
- F27: Sets the function of OUT-EXT3 (7-8) on the external connection terminal block TM4.
- F28: Sets the function of OUT-EXT1 (9-10) on the external connection terminal block TM4.

Details of external connection terminal blocks (☞ 4.6.1 Connection with external equipment)

The functions set to F25 to F28 are as shown on the table below.

Setting	Function name	Contents
0	–	No function is allocated.
1	Pulse synchronous output	When Pulse is set "ON" the circuit between the terminals is closed during the pulse period.
2	Welding monitor alarm	A short-circuit occurs between terminals when a welding monitor alarm (☞ 7.2.2.3 Welding monitor) has occurred.
3	EN synchronous output	In AC TIG mode, the terminals are closed during the EN period (negative electrode).
4	AC synchronous output	In AC-DC TIG mode, the terminals are closed during the AC period.

6.10.2.25 F29 to F32: External input terminal setting

Set the function of external input terminals. (when using robot or automatic machines)

- F29: set the function of IN-EXT1 ("5" to "9") on the external connection terminal block TM3.
- F30: set the function of IN-EXT2 ("6" to "9") on the external connection terminal block TM3.
- F31: set the function of IN-EXT3 ("7" to "9") on the external connection terminal block TM3.
- F32: set the function of IN-EXT4 ("8" to "9") on the external connection terminal block TM3.

For the details of external connection terminal block; (☞ 4.6.1 Connection with external equipment)

The functions allocable to F29 to F32 are as follows:

Setting	Function name	Explanation
0	-	No function is allocated.
1	Gas valve	Causing short circuit between terminals opens the gas valve. (*1)
2	Start	Causing short circuit between terminals starts welding. (torch switch: ON) (*2)
3	Loading welding condition	The welding conditions stored on the memory can be read out by combination of signals. (*3), (*4)
4	Pulse synchronization	Switches over between the pulse current and the base current synchronized with the signal inputted to the external connection terminal block. The pulse current is selected when the terminals are shorted, while the base current is selected when they are opened. (*5)
5	JOB shift +	Causing short circuit between terminals shifts to the following JOB No.. (*6), (*8)
6	JOB shift -	Causing short circuit between terminals shifts to the previous JOB No.. (*7), (*8)

*1: When the gas valve is opened by the signal from the external input terminal, the gas valve will not close when welding completes or according to the timer (2 minutes). In order to stop gas, ensure to open the terminals.

*2: The torch switch outlet at the front of the welding power source is disabled.

*3: Combination of the external input terminals enables to read out the welding conditions of the JOB No. 1 to 16 (Registration No. 1 to 16) registered on the memory. The corresponding JOB No. are as shown in the below table.

JOB No.	Function (external input terminal)			
(Registration No.)	F29(IN-EXT1)	F30(IN-EXT2)	F31(IN-EXT3)	F32(IN-EXT4)
1	OFF (open)	OFF (open)	OFF (open)	OFF (open)
2	ON (close)	OFF (open)	OFF (open)	OFF (open)
3	OFF (open)	ON (close)	OFF (open)	OFF (open)
4	ON (close)	ON (close)	OFF (open)	OFF (open)
5	OFF (open)	OFF (open)	ON (close)	OFF (open)
6	ON (close)	OFF (open)	ON (close)	OFF (open)
7	OFF (open)	ON (close)	ON (close)	OFF (open)
8	ON (close)	ON (close)	ON (close)	OFF (open)
9	OFF (open)	OFF (open)	OFF (open)	ON (close)
10	ON (close)	OFF (open)	OFF (open)	ON (close)
11	OFF (open)	ON (close)	OFF (open)	ON (close)
12	ON (close)	ON (close)	OFF (open)	ON (close)
13	OFF (open)	OFF (open)	ON (close)	ON (close)
14	ON (close)	OFF (open)	ON (close)	ON (close)
15	OFF (open)	ON (close)	ON (close)	ON (close)
16	ON (close)	ON (close)	ON (close)	ON (close)

The external input terminal without the setting "3" is regarded as signal OFF. Accordingly, for the function (external input terminal) which does not require the "ON" status for the JOB No. to read can be set to other functions.

Example 1) In reading out the welding condition of the JOB No.3;
Setting F30 to "3" and turning the signal of external input terminal IN-EXT2 to ON enable to read out the JOB No.3.
For F29, F31, and F32, other functions can be set.

Example 2) In reading out the welding condition of the JOB No.3;
Setting F29 to F32 to "3" and turning the signal of external input terminal IN-EXT2 to OFF enable to read out the JOB No.3.

Example 3) In reading out the welding condition of the JOB No.7;
Setting F30 and F31 to "3" and turning the two signals of the external input terminal IN-EXT2/IN-EXT3 to ON enable to read out the JOB No. 7. For F29 and F32, other functions can be set.

*4: Even after reading out the welding condition by this function, welding method can be changed either via the front panel or by the "DC/PULSE switch" of the external input terminal. In this case, the welding condition is newly read out when the signal of external input terminal to which this function is allocated to has any change again.

*5: The pulse output does not issue even when the pulse synchronization input terminals are shorted in the initial current and crater current periods. The selection changes only when the level of the input signal is held at least for 2 ms.

*6: The JOB No. shifts to the following number and read out the condition by causing short circuit between terminals for 300msec during JOB shift mode.
If the JOB No. shifts to the largest number, it shifts to the smallest number.

*7: The JOB No. shifts to the previous number and read out the condition by causing short circuit between terminals for 300msec during JOB shift mode.
If the JOB No. shifts to the smallest number, it shifts to the largest number.

*8: When welding condition is not registered in the JOB No., it shifts to the registered JOB No.. The condition can not be changed during welding.
To release the JOB shift mode, release the external input terminals. The digital meter displays current and voltage after 2 sec have passed.

Example:
The operation flow will be as follows when F29 is set to "3", F30 is set to "0", F31 is set to "3" and F32 is set to "0".

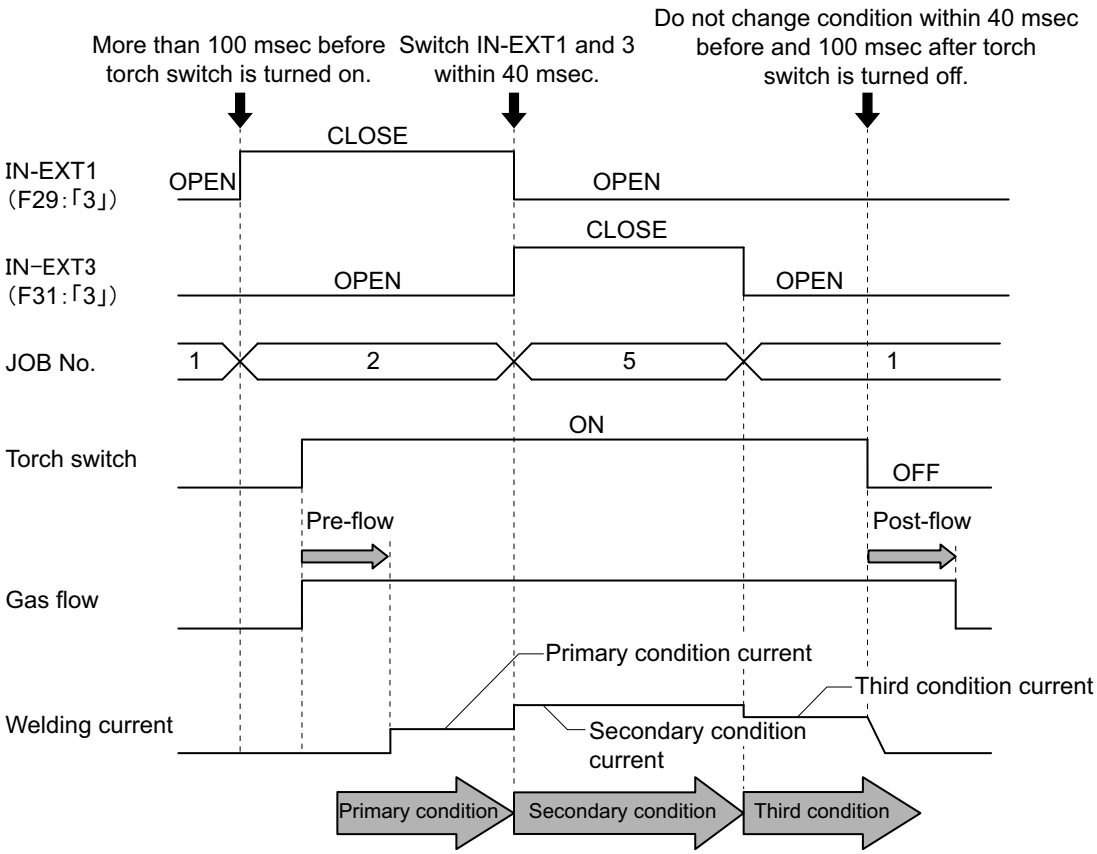

- Before 100 ms of the torch switch ON (start signal "ON"), set the welding condition to "3" for F29 to F32 to read out the welding JOB No.
- To switch plural signals at the same time, carry out the operation within 40 ms.
- From 40 ms before the torch switch OFF (start signal "OFF") to 100 ms after it, do not change the setting of "3".

6.10.2.26 F33: TIG interval function

This function repeats ON / OFF of arc to control heat input in AC TIG mode, AC-DC TIG mode, and DC TIG mode.

- [ON]: This function is enabled.
- [OFF]: This function is disabled.

TIPS

- **Since arc turns ON/OFF repeatedly, high-frequency voltage is applied frequently.**
- **Touch start cannot be used when this function is enabled.**

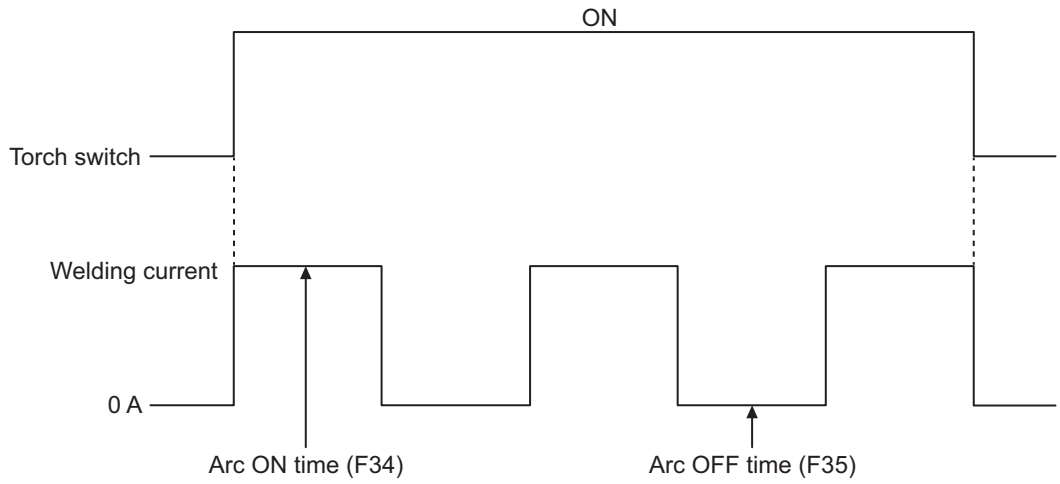

6.10.2.27 F34: Arc ON time of TIG interval

Set the arc ON time in the TIG interval function.

- Set the arc on time within the range of 0.05 to 9.99 sec.

6.10.2.28 F35: Arc OFF time of TIG interval

Set the arc OFF time in the TIG interval function.

- Set the arc off time within the range of 0.05 to 9.99 sec.

6.10.2.29 F36: STICK welding torch switch function

Enables to start and stop welding with the torch switch in the AC STICK welding mode and DC STICK welding mode.

Since the no-load voltage is output when the torch switch is pressed, arc is started by contacting the welding rod with the base metal when no-load voltage output is being output.

Releasing the torch switch will stop the output, finishing welding. There is no need to pull up the welding rod to finish welding.

- [ON]: Start and stop of welding is done with the torch switch in the STICK welding mode.
- [OFF]: No-load voltage is automatically output in the STICK welding mode. At the end of welding, pull up the welding rod to finish welding.

TIPS

- **If the welding rod has stuck during welding, stop the output by releasing the torch switch. Then, it becomes easier to pull the welding rod off the work. Also, no arc mark will remain on the work as arc is not generated when the welding rod is pulled off.**

6.10.2.30 F37: Switchover of characteristics (AC STICK welding)

Switches the static characteristics to constant current characteristics or drooping characteristics in AC STICK welding mode.

By setting to drooping characteristics, the output current increases as the arc length becomes short and it decreases as the arc length becomes long.

- [ON]: Static characteristics become drooping characteristics in AC STICK welding mode.
- [OFF]: Static characteristics become constant current characteristics in AC STICK welding mode.

TIPS

- **When the static characteristics is constant current characteristic, constant current is output irrespective of the arc length.**

6.10.2.31 F 38: Adjustment of drooping characteristics current change amount (AC STICK welding)

Sets the change amount of the current with respect to the arc length in drooping characteristics of AC STICK welding.

- Set the change amount of the current within the range of -100 to 100.
- When set to a negative value, the current change amount increases.
- When set to a positive value, the current change amount decreases.

6.10.2.32 F39/F40: Current display adjustment (Gain/offset)

Set the adjustment value (gain / offset) when the current display value on the left digital meter is different from the actual current value.

The current value displayed on the digital meter is obtained by software processing of the average value of outputs; therefore, it may not be consistent with the value indicated on a needle meter, etc. When this happens, using this function enables to finely adjust the current display value.

- For F39, set gain, and for F40, set offset.
  Changing the set value only corrects the display; the output welding current does not change.
- For more information on the adjustment procedure, contact dealer.

NOTE

- **Do not carelessly change the setting of this function.**

6.10.2.33 F41/F42: Voltage display adjustment (Gain/offset)

Set the adjustment value (gain / offset) when the voltage display value on the right digital meter is different from the actual voltage value.

The voltage value displayed on the digital meter is obtained by software processing of the average value of outputs; therefore, it may not be consistent with the value indicated on a needle meter, etc. When this happens, using this function enables to finely adjust the voltage display value.

- For F41, set gain, and for F42, set offset.
  Changing the set value only corrects the display; the output welding voltage does not change.
- For more information on the adjustment procedure, contact dealer.

NOTE

- **Do not carelessly change the setting of this function.**

6.10.2.34 F43: CAN ID

When multiple welding power sources are connected with a PC monitoring system, set ID for CAN.

6.10.2.35 F44: Reading welding conditions with remote control

Sets whether to read the welding condition registered to the memory by the analog remote control (optional) or not. This function is effective when the internal function F4 (Auto / Manual mode) is set to "0".

- [ON]: reads the welding condition by the analog remote control (optional)
  - Setting the welding current setting knob on the analog remote control to 1-10 of the scale can read out the conditions stored to the JOB No. 1-10.
  - By the welding voltage setting knob, fine adjustment of the welding voltage of the condition read out is available. (% adjustment)
    Adjust the voltage value based on the center of welding voltage setting knob. To increase the welding voltage, turn the knob clockwise and to reduce the welding voltage, turn the knob counterclockwise. The fine adjustment range for welding voltage is up to ±20 %.

Example:
The right figure shows an example when the JOB No. "3" is read out and the welding voltage is the condition stored on the memory (no fine adjustment).

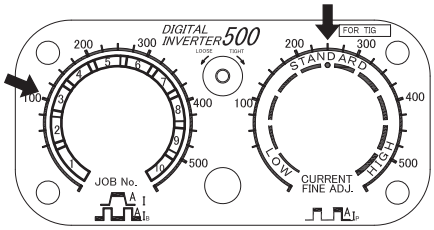

- [OFF]: disables the function.
- In the following cases, this function cannot be used:
  - Welding conditions are not registered to the memory;
  - Analog remote control (optional) is not connected to the welding power source;
  - Internal function F45 (Special crater sequence) is set to "ON" (enabled);
  - TORCH CURRENT AJUSTMENT key is set to "ON" (enabled); or
  - Either of the internal functions F29 to F32 (External input terminal setting) is set to either "2" (Start) or "3" (Loading welding condition).
  - Internal function F4 (Auto / Manual mode) is set to a value other than "0" (Manual mode).

6.10.2.36 F45/F46/F47: Special crater sequence (effective/initial standard time setting/ crater standard time setting)

Incorporates initial condition and crater condition in the "No crater" sequence.

- Setting the internal function F45 to [ON] enables to carry out the initial welding / crater treatment set by F46 / F47 even in the welding of "No crater" condition.
- When this function is enabled, the LED of "No crater" of the CRATER-FILL key flashes, enabling the internal functions F46 and F47.
- To the internal function F46, set the time for initial welding in the range of 0.0 to 10.0 seconds. Set the value in the range of 0.0 to 10.0 seconds.
- To the internal function F47, set the crater treatment time in the range of 0.0 to 10.0 seconds. Set the value in the range of 0.0 to 10.0 seconds.

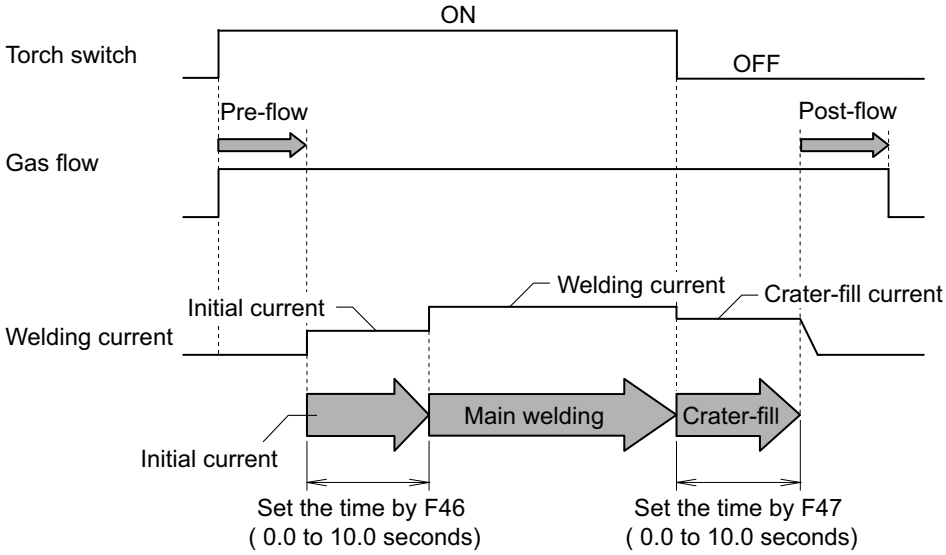

TIPS

- **When the internal function F45 is set to [ON], automatically the setting of "No crater" is selected, disabling other welding modes. (The CRATER-FILL key does not work.)**
- **Welding method at crater treatment is the same as that of main welding.**

- In the following cases, this function cannot be used:
  - Internal function F44 (Reading welding condition with remote control) is set to "ON" (enabled);
  - TORCH CURRENT ADJUSTMENT key is set to "ON" (enabled);
  - Either of the internal function F29 to F32 (External input terminal setting) is set to "3" (Loading welding condition).

6.10.2.37 F48: Setting change of current value (initial current, crater current)

When "CRATER ON" is selected, the current value of the initial condition and the crater condition can be set in percentage based on the current value of the welding condition.

- [ON]: enables the function.
  Set the current value of the initial condition with F49, and set the current value of the crater condition with F50.
- [OFF]: disables the function.

6.10.2.38 F49: Setting of current value (initial current)

The current value of the initial current can be set in percentage based on the current value of the welding condition.

- Setting range of current value (initial current): 10 % to 300 %

6.10.2.39 F50: Setting of current value (crater current)

The current value of the crater current can be set in percentage based on the current value of the welding condition.

- Setting range of current value (crater current): 10 % to 300 %

6.10.2.40 F52: Data type of data log function

This function enables to select data to save when using the data log function.
The patterns of data which can be saved are as shown in the below table.

Setting	Welding current (Command value)	Welding current (Detected value)	Welding voltage (Detected value)
0	-	-	-
1	Storable	Storable	Storable

For data log function; (☞ 7.3 Data Backup (Utilization of data)).

6.10.2.41 F53: Sampling speed of data log function

Selects the data sampling interval in using data log function.
The relationship between the setting value and the data sampling is as follows:

Setting	Sampling interval
1	10 ms
2	100 ms
3	1 s

For data log function; (☞ 7.3 Data Backup (Utilization of data)).

6.10.2.42 F55 to F59: Reserved

Used in connection with the automatic machines of other manufacturers.

6.10.2.43 F60: Electrode formation function

In the AC TIG mode and AC-DC TIG mode, rounds the electrode at the arc start to form the optimum electrode shape. Arc is stabilized by rounding the electrode.

This function automatically turns off when welding starts.

When the electrode is replaced, it is necessary to enable this function again.

- When using this function, select the electrode diameter from Φ1.6, 2.4, 3.2, 4.0, 4.8, 5.6 and 6.4.
- [OFF]: This function is disabled.

6.10.2.44 F61: Fine adjustment of electrode formation

Fine adjusts the shape of the electrode tip in the electrode formation function.

Fine-adjust the formation time by the grinding angle of the electrode.

- If the grinding angle is sharp, set to negative.
- If the grinding angle is obtuse, set to positive.

6.10.2.45 F62: Extended cable mode

Sets the welding control for the extended cable when the welding power source is used in AC TIG mode or AC-DC TIG mode.

Extending or winding the power cable such as the cable (base metal side) and the torch cable will cause the E-751 error code (Secondary side circuit overvoltage error). In such a case, you may correct the error by setting this function to "ON" (Extended cable mode).

- [ON]: Extended cable mode
  Set to "ON" as a guide when the length of the extension cable exceeds 30 m round-trip. When set to "ON", the "AC WAVEFORM" LED flashes.
- [OFF]: Standard mode
  This is the standard AC TIG mode and AC-DC TIG mode.

NOTE

- **When the extended cable mode is set to "ON", the AC frequency setting range is limited within 30 to 100 Hz. Depending on the condition of the output cable, current may not be output as specified in comparison with the standard mode.**
- **If the output cable is extended, the high frequency start voltage is attenuated and the arc startability is impaired depending on the routing of the cable. If welding does not start in the high frequency start method, switch to the touch start method.**

6.10.2.46 F77: Welding result control function identification numbers

Sets the identification numbers of welding power source when using welding result control function. The identification number set in this function become the part of file name when backing up the data of welding result control function. (☞ 7.3.4 Welding Result Control Function)

- Setting range of identification number: 1 to 999.

6.11 Operation of Analog Remote Control (Optional)

This section explains the functions of knobs and buttons arranged for the analog remote controller (optional) as well as their operation.
Since the setting at the analog remote control is preferred when connected, it is not possible to set this condition on the operation panel of welding power source. (The initial current and crater current can be set on the operation panel.)

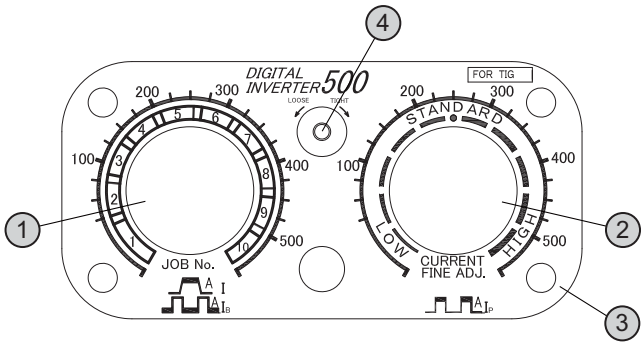

No.	Name	Function
1	Welding current adjustment knob	Set the welding current. The set value is displayed on the left digital meter at the welding power source side.
2	Pulse current adjustment knob	Sets the pulse current. The set value is displayed on the left digital meter when the pulse current is selected with the PARAMETER SELECT key.
3	Scale plate (*1)	The following three scale plates are available. • 500/400/300/200/100 Change the scale plate according to the selected scale of analog remote control (☞ 6.10.2.9 F9: Analog remote control scale).
4	Fixing screw	To replace the scale plate, turn the screw counter clockwise, and remove them.

*1: When adjusting in a low current range in such a case when welding a sheet metal, fine adjustment can be carried out by using the attached scale plate of 100 A full scale. To use the 100 A scale plate, set the internal function F9 to "100". (☞ 6.10.2.9 F9: Analog remote control scale)

TIPS

- **In connecting (or removing) the analog remote control to (or from) the welding power source, turn OFF the power switch of the welding power source.**
- **The analog remote control is automatically recognized after being connected to the analog remote control and turning ON the power switch.**

Chapter 7 Administrator Functions

This chapter explains the functions used by administrators such as protection and initialization of welding conditions.

7.1 Protection of Welding Conditions

This chapter explains the protection function (password function) of welding conditions. When the function is enabled, ☞ 5.4.2 Preventing erroneous operation on operation panel (Erroneous operation prevention function)a password will be requested to disable the erroneous operation prevention function.
The erroneous operation prevention function prohibits the following operations to prevent accidental change of welding conditions.

- Setting welding conditions (Checking of settings is allowed)
- Operating the mode switching keys and the parameter adjusting knob

Functions such as gas check that do not affect the welding conditions will not be prohibited. The operations above will become possible if the erroneous operation prevention function is disabled.

NOTE

- **Write down the password on a piece of paper and store it safely.**
- **The current password will be requested also when you change it.**
- **If a password is set and the erroneous operation prevention function is enabled, the erroneous operation prevention function will not be disabled even if the power is turned off and on or if the welding conditions and internal functions are initialized.**
- **If the password is lost, please contact your dealer.**

7.1.1 Setting/Changing password

This section explains how to set and change the password.

- Welding is not possible during setting the password.
- Set a three-digit number other than "000" as the password. Setting "000" does not set a password. (No password specified)
- To change the setting of the password on the way, move the digit position by pressing the [◀] or [▶] key.
- To cancel setting of the password, turn off the power switch.

NOTE

- **First determine a specified number and write it down on a piece of paper, and then set the number as the password having the paper at hand.**

STEP

1. **Turn off the power switch.**
2. **Press and hold the F (function) key and the ENTER key simultaneously and turn on the power switch.**

- Hold the two keys pressed down until "Loc" is displayed on the left digital meter. "PAS" -> "Loc" will be displayed in order.)
  Release the keys after "Loc" is displayed.
- If a password has already been set, "Loc" will flash. To change the password, delete the password with the operation from the step 2 of "7.1.2 Disabling erroneous operation prevention" and go to the next step. (☞ 7.1.2 Disabling erroneous operation prevention)
- If a password has not been set yet, "Loc" lights up. Check that "Loc" is not flashing before starting the next step.

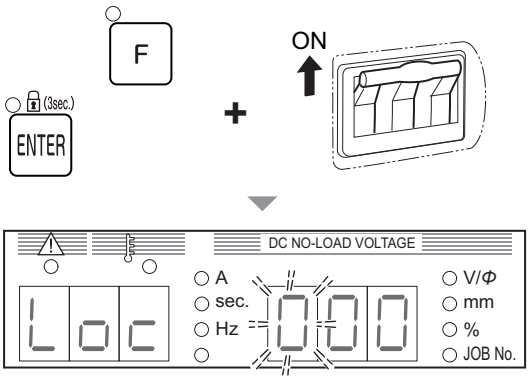

3. **Turn the parameter adjusting knob to set the hundreds place digit.**

- The hundreds place flashes on the right digital meter. Display the desired number and press the [◀] or [▶] key.
  Then the tens place will flash on the right digital meter.

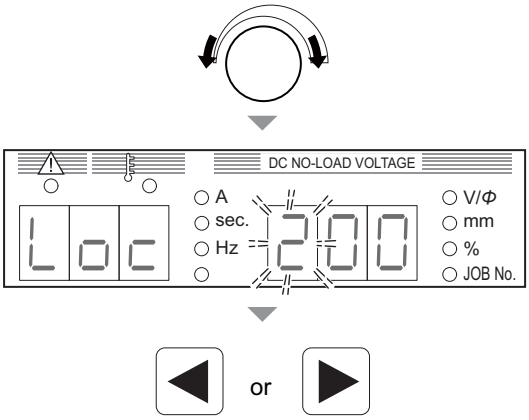

4. **Set the tens place digit and ones place digit in the same manner as the step 3.**
5. **Press the ENTER key.**

⇒ The left and the right digital meters flash alternately.

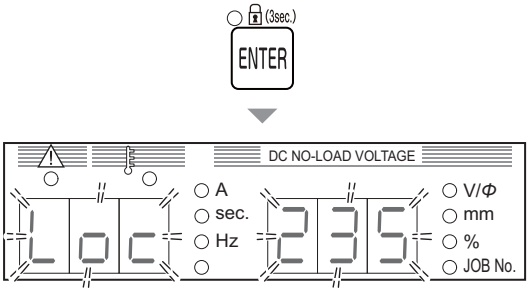

6. **Check that the password is correct and press the ENTER key.**

⇒ The password has been set.

TIPS

- **After the password is set, if the ENTER key is pressed and held for 3 seconds or more, the LED of the ENTER key lights up and the erroneous operation prevention function becomes enabled. To disable the erroneous operation prevention function, the password will be requested.**

7.1.2 Disabling erroneous operation prevention

This section explains how to disable the password-protected erroneous operation prevention function.

- To change the input of the password on the way, move the digit position by pressing the [◀] or [▶] key.
- To cancel deleting the password, press and hold the F (function) key for one second or more.

STEP

1. **Press and hold the ENTER key for three seconds or more.**

   ⇒ "Loc" flashes on the left digital meter.
   ("PAS" -> "Loc" will be displayed in order.)

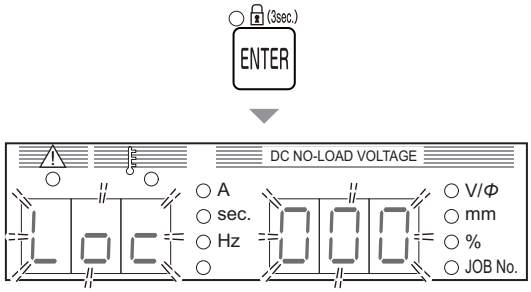

2. **Turn the parameter adjusting knob to select the hundreds place digit specified as password.**

   ● The hundreds place flashes on the right digital meter. Display the number specified as the password and press the [◀] or [▶] key.
   Then the tens place will flash on the right digital meter.

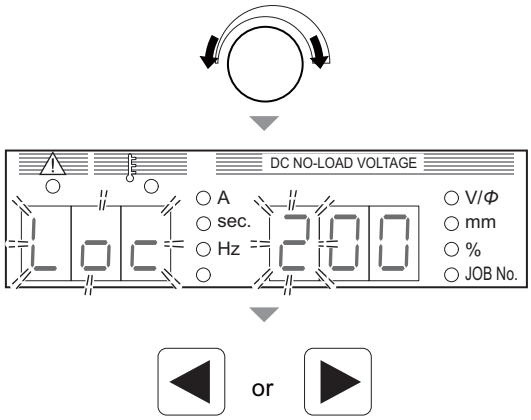

3. **Select the tens place digit and ones place digit in the same manner as the step 2.**
4. **Press the ENTER key.**

   ⇒ When the number matches the set password, "goo"/ "d" are displayed on the left/right digital meters respectively and the lock will be released.

   ⇒ If the number does not match the set password, "bAd" is displayed on the left digital meter and the status returns to the step 2.

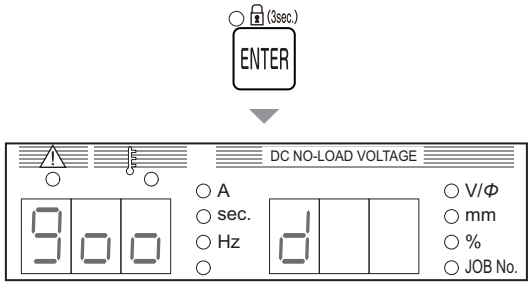

7.2 Welding Result Control Function

This section explains about the welding result control function. The function enables the management of the items below.

Welding control parameter	Monitor No.	Initial value	Setting range	Explanation
Number of welding point	P10	0	-	Cumulative number of welding points (number of times)
	P11	0	0 to 999	Target value of welding points (number of times)
	P12	0	0 to 5	Operation at the time when the target value of welding points is achieved
Total welding time	P20	0	-	Cumulative total welding time (minute)
	P21	0	0 to 999	Target total welding time (minute)
	P22	0	0 to 5	Operation at the time when the target total welding time is achieved
Welding monitor	P30	0	-	Max. fluctuation value of average range monitor (A or V)
	P31	100	0 to 100	Current tolerance (+) (%)
	P32	100	0 to 100	Current tolerance (-) (%)
	P33	100	1 to 100	Welding voltage upper limit value setting (V) (*1)
	P34	0	0 to 99	Welding voltage lower limit value setting (V) (*1)
	P35	0	0 to 100	WARNING judgment time (second)
	P36	0	0 to 2	Operation at the time of WARNING detection
Total operation time control	P40	0.0	-	Cumulative total operation time (hour) (*2)
	P41	0.0	-	Cumulative total welding time (hour) (*2)
	P42	oFF	oFF/cLr	Clear of control data value (*3)

*1: Upper limit value is controlled not to become under the lower limit value.
*2: Any value smaller than 100 is displayed up to the first digit below the decimal point.
*3: The values in P10, P20, P40 and P41 will be reset by setting P32 to "cLr" to exit the welding control mode.

Details of control contents (☞ 7.2.2 Details of welding control items)

7.2.1 Setting welding result control function

This section explains how to set the welding result control function.

STEP

1. **Press and hold the WELD MONITOR key for one second or more.**

⇒ The LED of WELD MONITOR key lights up.

⇒ The monitor No. is displayed on the left digital meter.

⇒ The data value specified for the monitor No. is displayed on the right digital meter.

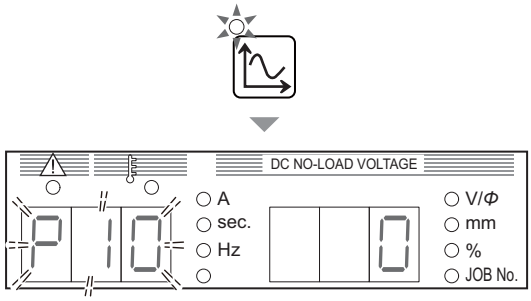

2. With the parameter adjusting knob and the WELD MONITOR key, select the desired monitor No.

- Turning the parameter adjusting knob will change the tens place digit of monitor No. (Example: "P10" -> "P20" -> "P30" -> "P40")
- Pressing the WELD MONITOR key briefly will change the ones place digit of monitor No. (Example: "P10" -> "P11" -> "P12")

⇒ When an appropriate monitor No. is selected on the left digital meter, the right digital meter will flash.

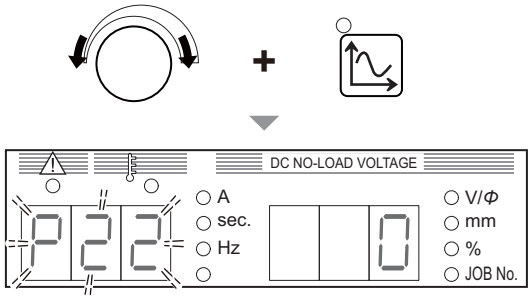

3. Turn the parameter adjustment knob, and change the setting value.

⇒ The set value is displayed on the right digital meter.

⇒ To select another monitor No., press the WELD MONITOR key briefly and set the ones place digit to "0" on the left digital meter, and perform the step 2.

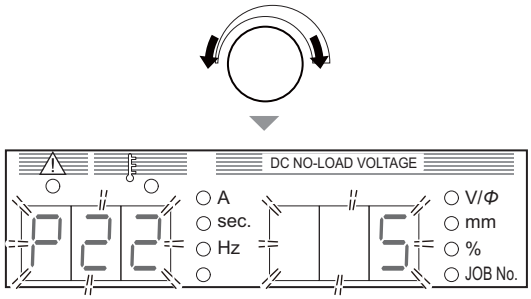

4. Press and hold the WELD MONITOR key for one second or more.

⇒ The changed data values are saved and the LED of WELD MONITOR key goes off.

⇒ When the set target is achieved or at the time of WARNING detection, an alarm will appear on the left / right digital meters. (☞ 7.2.2 Details of welding control items)

7.2.2 Details of welding control items

This section explains about details of the welding result control function.

7.2.2.1 Number of welding point

The number of welding points is controlled according to the setting range.

- P10 (Cumulative number of welding points)
  The interval from the start of current flowing triggered by the torch switch ON to the stop of output triggered by the torch switch OFF is regarded as one count (one welding point) and accumulated.

  The setting range of count value is between 0 and 999. The count value will be cleared according to the "P12" setting. (If continuous operation is enabled, the value will be cleared when exceeding 999 and return to 0.)

- P11 (Target value of welding points)
  Select the target value of welding points in the range from 0 to 999. When the "P10" count value reaches the number of welding points specified here, an alarm appears indicating that the target is achieved. (☞ 7.2.2.4 Alarm indication when target is achieved)

- P12 (Operation at the time when the target value of welding points is achieved)
  Select the operation from 0 to 5 for the time when the target specified for "P11" is achieved. The set values and operations when the target is achieved are as below.

Operation	Set value					
	0	1	2	3	4	5
The count value is cleared when the target is achieved (*1)	Yes	No	Yes	No	No	No
Operation is continued after the target is achieved (*2)	Enable	Enable	Enable	Enable	Disabled	Disabled
The count value is cleared when the power is turned on	Yes	Yes	No	No	Yes	No

*1: When an alarm is displayed, pressing any key of the operation panel can also clear the count value.

*2: If "Disabled" is selected and the target is achieved, next welding cannot start until any key on the operation panel is pressed.

7.2.2.2 Total welding time

The total welding time is controlled according to the setting range.

- P20 (Cumulative total welding time)
  Every interval from the start of current flowing triggered by the start signal ON to the stop of output triggered by the start signal OFF is counted and accumulated as welding time.

  The setting range of count value is between 0 and 999 minutes. The count value will be cleared according to the "P22" setting. (If continuous operation is enabled, the value will be cleared when exceeding 999 and returns to 0.)

- P21 (Target total welding time)
  Select the target value of total welding time in the range from 0 to 999 minutes.
  When the "P20" count value reaches the total welding time specified here, an alarm displays indicating that the target is achieved. (☞ 7.2.2.4 Alarm indication when target is achieved)

- P22 (Operation at the time when the target total welding time is achieved)
  Select the operation from 0 to 5 for the time when the target specified for "P21" is achieved.
  The set values and operations when the target is achieved are the same as those of the "P12" function. "P12 (Operation at the time when the target number of welding points is achieved)" (☞ 7.2.2.1 Number of welding point)

7.2.2.3 Welding monitor

Average current / voltage during welding is monitored. When it exceeds the range specified here, an alarm displays and the output stops. By setting the internal functions, it is possible to output an alarm signal to the external output terminal if the setting range is exceeded. (☞ 6.10 Setting Internal Functions)

- P30 (Max. fluctuation value of average value monitor)
  If the average current / voltage (average per second) becomes outside the allowable tolerance range specified in "P30" to "P34", an alarm is displayed indicating the following contents. (☞ 7.2.2.5 Alarm indication at the time of WARNING detection (Welding Monitor "P35" "P36"))

If the current is out of the range	: Difference (A) between the set value and the average value of welding current
If the voltage is out of the range	: Difference (V) the average value of welding voltage
If both the current and voltage are out of the range	: Difference of either value which is more largely out of the range than the other

- P31 (Current tolerance (+))
  P32 (Current tolerance (-))
  Set the allowable tolerance range from 0 to 100% corresponding to the set value of welding current.

  Example: Setting example of "P31" and "P32" when the set value of welding current is 200 A and that of welding voltage is 20 V

  Setting P31 (Current tolerance (+)) to "10" % (= 220 A)
  Setting P32 (Current tolerance (-)) to "20" % (= 160 A)
  In the example above, the allowable tolerance range of welding current will be 160 to 220 A.

- P33 (Setting of voltage upper limit)
- P34 (Setting of voltage lower limit)
  Set the allowable tolerance range of the welding voltage from 0 to 100V.
- P35 (WARNING judgment time)
  Set the time to judge an event as an error in the range from 0 to 100 seconds when the average current/voltage (average per second) during welding is outside the allowable tolerance range.
  When the out-of-range state exceeds the time specified here, an alarm is displayed. (☞ 7.2.2.5 Alarm indication at the time of WARNING detection (Welding Monitor "P35" "P36"))

  If "0" is set, WARNING detection is not performed.
- P36 (Operation at the time of WARNING detection)
  Set the operation at the time of WARNING detection from 0 to 2.
  The set values and operations at the time of WARNING detection are as below.

Set value	Operation
0	Alarm indication only. Welding can continue. (Continuous operation is possible)
1	The ongoing welding can continue. After the welding is finished, next welding cannot start until any key of the operation panel is pressed. (Continuous operation is not possible)
2	Welding stops immediately. Next welding cannot start until any key of the operation panel is pressed. (Continuous operation is not possible)

- Alarm signal output function to external output terminal
  If the average current/voltage (average per second) during welding falls outside the tolerance range set by "P31" to "P34", the external output terminals set by the internal functions will be shorted. (☞ 6.10.2.24 F25 to F28: External output terminal setting)
  The shorted external output terminals open when any of the following conditions are met.
  - When some key on the panel is pressed while the alarm is displayed and normal display is restored.
  - When the torch switch is set to “ON” while an alarm is displayed to start welding (only when P36 is set to "0")
  - When operation is stopped by releasing 3-4 (operation stop terminal) on the external connection terminal block TM3 during alarm indication, and then the operation stop is canceled by short-circuiting these terminals (only when F4 setting is "1" or "2").

7.2.2.4 Alarm indication when target is achieved

When any of the number of welding points, total welding time reaches the target specified, its corresponding control No. will flash.

- In the right example, the control No. "P20" flashes on the left digital meter and the specified value "910" on the right digital meter.
- The display returns to the normal state when any key of the operation panel is pressed.
- If continuous operation is enabled in the setting of the operation for the time when the target is achieved, an alarm will display every time welding finishes until any key of the operation panel is pressed.

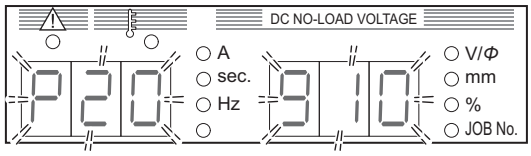

<Example> When Total welding time has reached the target value

7.2.2.5 Alarm indication at the time of WARNING detection (Welding Monitor "P35" "P36")

If the average current or average voltage becomes out of the specified range, the difference between the average value and the specified value will flash.

- The right example shows a current error. The control No. "P30" flashes on the left digital meter and the difference between the average value and specified value "30" on the right digital meter, with the "A" LED lighting.
- The display returns to the normal state when any key of the operation panel is pressed.
- If continuous operation is disabled ("1" or "2" is selected) in the "P36" setting, next welding cannot start until any key of the operation panel is pressed.

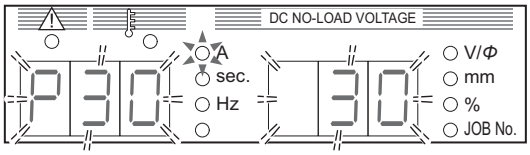

<Example> While welding is conducted with the welding current 200A/Current tolerance (+) 10% (= 220A), the average current during welding rose to 230A and the WARNING judgment time specified in "P35" elapsed.

7.2.2.6 Total operating time control

Total operation time and total welding time are managed according to the display range.

- P40 (Cumulative total operation time)
  The operation time of welding power source is counted at all time and accumulated as total operation time. The display range of data value is between 0 and 999 hours. The time between 0 and 99.9 hours are displayed in the unit of 0.1 hour and the time exceeding 100 hours is displayed in the unit of 1 hour.
  Refer to P42 (Clear the control data) about how to clear "P40".
- P41 (Cumulative total welding time)
  Every interval from the start of current flowing triggered by the start signal ON to the stop of output triggered by the start signal OFF is counted and accumulated as welding time. The display range of data value is between 0 and 999 hours. The time between 0 and 99.9 hours are displayed in the unit of 0.1 hour and the time exceeding 100 hours is displayed in the unit of 1 hour.
  Refer to P42 (Clear the control data value) about how to clear "P41".
- P42 (Clear of the control data value)
  After setting the set value of P42 to "cLr", finish the welding control setting with the “WELD MONITOR" key held pressed for one second or more. Then, the control data shown below will be cleared.

  P10 (Cumulative number of welding points)
  P20 (Cumulative total welding time)
  P40 (Cumulative total operation time)
  P41 (Cumulative total welding time)

Chapter 8 Maintenance and Inspection

This chapter explains the daily and periodical inspection of the welding power source.

8.1 Precautions for Maintenance and Inspection

This section explains the precautions for maintenance and inspection work.

To prevent electric shock or burn injury, ensure to follow the instructions below:

⚠ WARNING

- **Do not touch the input and output terminals and the internal live electrical parts of the welding power source.**
- **Perform periodical maintenance and repair damaged parts if any before use.**
- **Maintenance, inspection and repair should be performed by qualified persons or persons familiar with the Welding power source.**
- **Before starting maintenance and inspection, make sure to cut the input power with the disconnect switch in the box connected with the welding power source and wait three minutes or more.**
  The capacitors may be still charged even after the input power is cut. Make sure that there is no charged voltage before starting the work.
- **During maintenance and inspection, take an appropriate measure to prevent turning on the input power.**
  Special attention is necessary because the welding power source contains many parts connected to the input side due to its high-frequency inverter method.
- **Periodically blow the parts of welding power source with dry compressed air to remove dust.**
  Powder dust accumulating inside may cause insulation deterioration, resulting in electric shock or fire.

⚠ CAUTION

- **Before maintenance and inspection, wait until the temperature inside the welding power source becomes low.**
  The main circuit parts such as DC reactor and heat sink are hot just after welding. Touching them accidentally may cause burn injury.

To prevent being caught / pinched by the rotating parts, ensure to follow the instructions below:

⚠ WARNING

- **Removing the cases for maintenance, inspection or repair should be performed by qualified persons or persons familiar with the Welding power source. Also put up a barrier around the Welding power source or take other necessary measure to prevent other people from getting in the nearby area.**
- **Keep your hands, fingers, hairs and clothes away from the rotating cooling fan and the open parts around the cooling fan;**

To prevent damage and problem of the welding power source and loss of the data, ensure to follow the instructions below:

⚠ CAUTION

- The welding conditions (electronic data) stored by this function are susceptible to occurrence of static electricity, impact, repa ir, etc., and there is a possibility that the stored contents may be changed or lost. Im portant information should also be stored as printed document.
  Please note that GeKaMac will not be liable for any alteration or loss of electronic information.
- When cleaning the welding power source, do not expose the cooling fan directly to compressed air.
  Otherwise powder dust may get inside the cooling fan. Also the cooling fan may rotate at high speed due to compressed air, resulting in wearing of the bearing.
- When using a vacuum cleaner to remove powder dust accumulating on the welding power source, do not vacuum between the rotating part of cooling fan and the main body.
  Otherwise lubricant of the bearing of cooling fan may also be removed, resulting in failure or shorter service life of the cooling fan.
- Do not connect a measuring instrument to the circuit when generating a high-frequency. The circuit and the meas uring instrument may break down.

8.2 Daily Inspection

This chapter explains the daily inspection of the welding power source. Perform daily inspection for the following items in the table.

Front and rear panel of the welding power source is made from polycarbonate resin. To prevent from electric shock or fire caused by the damage on polycarbonate resin, ensure to follow the instructions below.

⚠ WARNING

- **Before performing daily inspection, refer to " 8.1 Precautions for Maintenance and Inspection.**
- **If there is dirt on plastic parts, soak a soft cloth in water, alcohol or neutral detergent, wring it well and wipe off the dirt.**
  Do not use organic detergent or chemical agent. Doing so may cause crack (breaking) and degrade the strength.
- **If there is any abnormality in the plastic parts such as front and rear panels, immediately stop the use and contact your dealer.**

Daily inspection item	Content
Status of the grounding cable	• Check that the grounding terminal on the back of the welding power source is securely grounded. (If it is not grounded, electric shock/failure/malfunction may occur.)
Status of cables (Primary power cable for facility side, cables for base metal side/torch side, torch cable, voltage detection cable, etc.)	• Check that there is no abnormal heat generation in cable connections. • Check that cable connections are not loose. • Check that there is no problem in the insulation method between the cables and base metal. • Check that cables are not cut or damaged.
Appearance of the welding power source	• Check that there is no abnormality such as crack in plastic parts of the welding power source.
Noise/vibration/odor generated from the welding power source	• Check that there is no sound of metal, abnormal vibration or burnt odor inside the welding power source.
Status of the cooling fan	• Check that the cooling fan smoothly rotates when the power switch is turned on. (There should not be sound of metal, abnormal vibration or burnt odor.) While the cooling fan is rotating, air is ventilated from the slits on the front and rear of the welding power source.
Status of the operation panel/torch switch	• Check that the keys on the operation panel and the torch switch work normally.
Status of the primary power voltage for facility side	• Check that there is not large fluctuation in the primary power voltage.

8.3 Periodical Inspection

This section explains the periodical inspection of the welding power source. Check the items in the table below every three (3) to six (6) months.

⚠ WARNING

- **Before performing maintenance and inspection, read the instructions in "8.1 Precautions for Maintenance and Inspection" and "8.2 Daily Inspection".**

Periodical inspection item	Inspection work
Grounding wire	
Each cables (Primary power cable for facility side, cables for base metal side/torch side, torch cable, voltage detection cable, etc.)	• 8.2 Daily Inspection Refer to the description for the same item in "8.2 Daily Inspection".
Welding torch	• Confirm that there is no deterioration, damage or other abnormality in consumable parts of the welding torch.
Cleaning inside the welding power source	• Blow with dry compressed air from the front slit (ventilation hole) to the back side to remove dust inside the welding power source. Dust accumulating on the heat sink of transistor and rectifier may prevent heat radiation, adversely affecting the transistor. Also, accumulation of dusts between the winding of transducer could deteriorate insulation. 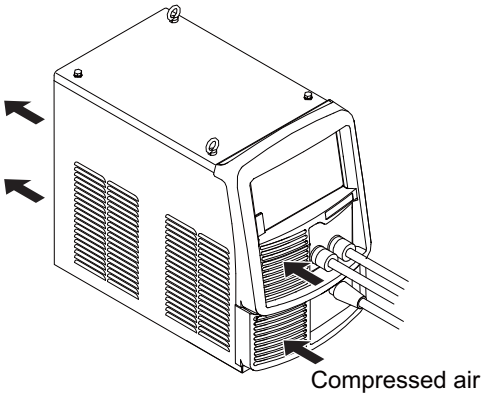
Cleaning inside the welding power source (When an abnormal temperature error code is displayed)	• Dust accumulating on the fin or winding of heat sink can cause insufficient heat radiation. Remove the left side panel and fan frame and check the the dirt inside. If there is heavy dirt, blow the fin and coils of heat sink directly with compressed air to remove dust inside. 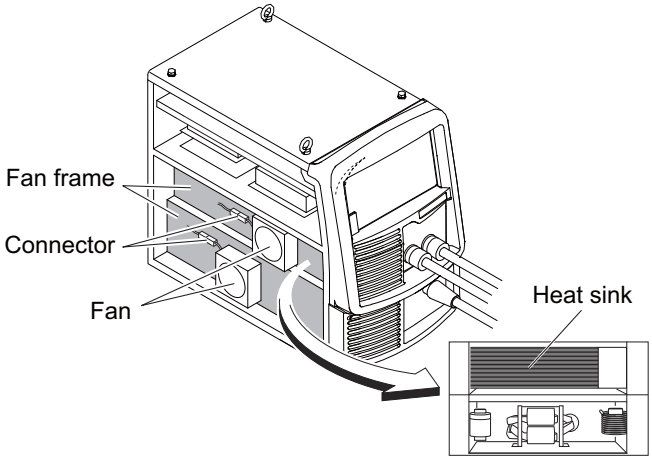

8.4 Periodical Replacement Parts

This section explains the parts to be replaced periodically.

- Printed circuit board PCB7 (☞ 10.1 Parts List)
  The printed circuit board PCB7 inside the welding power source has a high voltage electrolysis capacitor. The high voltage electrolysis capacitor supplies stable direct current to the inverter circuit, but its performance will degrade year by year.

  If the printed circuit board PCB7 is used for an extended period without being replaced, it may result in performance degradation of the welding power source and damage of the high voltage electrolysis capacitor or other parts.
  It is recommended to replace the printed circuit board PCB7 every five years.

  For replacement of the printed circuit board PCB7, contact your dealer.

  ⚠ CAUTION

  - **Even if the part is replaced by the user, please contact your dealer.**
  - **When inserting the connector to the printed circuit board, check that the number printed on the printed circuit board is the same as the number indicated on the connector, and insert firmly to the end.**
  - **Do not turn on the power switch of welding power source when the connector of printed circuit board is disconnected.**
  - **Never connect any measuring instrument to the circuit when generating high frequency. The circuit and the measuring instrument may break down due to high frequency.**

- Others
  Fan, relay, and rated power supply has a certain lifetime; they are recommended to be replaced once in approximately five years.
  When replacement of fan, relay, and rated power supply is necessary, please contact your dealer.

8.5 Insulation Resistance Measurement and Withstand Voltage Test

If insulation resistance measurement and withstand voltage test is necessary, please contact your dealer.

⚠ WARNING

- **The customer MUST NOT perform the withstand voltage test. If withstand voltage test is necessary, ensure to contact your dealer.**
- **Insulation resistance measurement should be conducted by qualified persons or persons familiar with the welding machine. Also, fence and other neccessary measures should be taken around the welding machine to prevent other people from getting in the nearby area.**

⚠ CAUTION

- **Conducting insulation resistance measurement by customer may result in injury or equipment failure. For insulation resistance measurement, be sure to ask your dealer.**

- When measuring insulation resistance and testing withstand voltage, follow the steps below.
  Refer to the schematic diagram, parts layout, and parts list for maintenance.
  - Disconnect the input power cable and grounding cable from the disconnect switch and short-circuit the input terminal.
  - Short-circuit the positive (+) and the negative (-) sides of the output terminal.
  - Unground all the case grounding cables (line No.80, total of 6 positions) and insulate them with insulation tape.
  - For DR1, 2, 5, 6, 7 and 8, short-circuit the AC side and positive (+) output side and the AC side and negative (-) output side, respectively.
  - Short-circuit between TR1 (C1) and (E1C2), TR1 (E1C2) and (E2), TR3 (C1) and (E1C2), and TR4 (E2) and (E1C2).
  - Short-circuit between TR5 (C1) and (E1C2), and TR6 (E1C2) and (E2).
  - Apply NF.
  - After finishing insulation resistance measurement, return the above to the original state.

⚠ CAUTION

- **After finishing insulation resistance measurement, it is necessary to remove the shortcircuit cables and return the welding power source to the original state.
  If the power is turned on without returning it to the original state, the welding power source will burn out.**

Chapter 9 Troubleshooting

This chapter explains the typical troubleshooting for the welding power source.

The cause of problems can be categorized as below:

- Mechanical problems (e.g., problems of driving mechanism of the filler wire feeder)
- Electric and control problems
- Operational errors

A problem may become complicated as a result of mix of multiple causes. If a problem has occurred in the welding power source, it is necessary to identify its cause and address it appropriately.

For question concerning problems, contact your dealer.

9.1 Action in Case of Error

This section explains the causes of abnormalities and how to cope with them in case of lighting/flashing of the "WARNING" LED and "Temperature WARNING" LED on the operation panel.
If any error occurs in the welding power source, the operation panel will indicate it as below:

- The "WARNING" LED and the "Temperature WARNING" LED light/flash
- An error code flashes on the left/right digital meters

The welding power source may stop or may not stop output depending on the type of error code. The meanings of (*1) and (*2) in the table below are as follows.

- *1: When the error occurs, the welding power source stops the output.
- *2: Even when the error occurs, the welding power source does not stop the output. To stop the output, set the internal function F19 to "ON". (☞ 6.10.1 Setting procedure)
  Details on the internal function F19 (☞ 6.10.2.18 F19: Switching alarm setting)

Check the error code displayed and take an appropriate action according to the table below.
(If the welding power source is combined with robots manufactured by GeKaMac, see the instruction manual of the robot controller.)

⚠ WARNING

- Before inspecting the welding power source, make sure to read "8.1 Precautions for Maintenance and Inspection".

⚠ CAUTION

- If an error code not listed in the table is displayed, write it down on paper, turn off the power switch and contact your dealer.
  Do not turn on the power switch because it may indicate a serious problem of the welding power source.

NOTE

- When a warning occurs while using a water-cooled welding, a water-cooled pump is operated.

Error code		Error cause	Action and how to cancel error
E-	000	There is no load between the STOP terminals (*1)	• Identify the cause of no load between the STOP terminals (3-4) of the terminal block TM3 for external connection. • How to clear the error code indication differs depending on the setting of internal function F4. (☞ 6.10.2.4 F4: Auto/Manual mode)
E-	010	The torch switch was on when the power switch was turned on (*1)	• Check that the torch switch is not on (not pressed). • If the internal functions F29 to F32 are set to "4" (activate), check also the connections of the terminal blocks for external connection. (☞ 6.10.2.25 F29 to F32: External input terminal setting) • The error code will disappear when the status above is resolved.
E-	030 to 037	Installing the software from a USB flash drive failed (*1)	• Check that the USB flash drive is normal and connected to the USB connector correctly, and try installing again. • The error code will disappear when the power switch is turned off.
E-	100	Error of control power (*1)	• If cables are drawn out of the welding power source, check that there is no abnormality (e.g., short-circuit) in the cables. • The error code will disappear when the power switch is turned off.
E-	150	The input voltage for primary side exceeded the allowable range (*1)	• Check that the input voltage for primary side is between 340 to 460 V. • The error code will disappear when the power switch is turned off.
E-	160	The input voltage for primary side fell below the allowable range (*2)	• Check that the input voltage for primary side is between 340 to 460 V. • Check the set value of internal function F20. (☞ 6.10.2.19 F20: Low input voltage detection level) • The error code will disappear when the power switch is turned off.
E-	300	The temperature of the output terminal has exceeded the allowable range. (*1)	• Turn off the power switch. • Confirm that the connection part is not loose after the temperature of the output terminal has lowered. • The error code will disappear when the power switch is turned off after the output terminal cools down.
E-	301 to 303	The temperature inside the welding power source exceeded the allowable range (*1)	• Leave it untouched (with the power on) and operate the cooling fan for 10 minutes or more, and then turn off the power. • After the above, clean dusts inside the welding power source. (☞ 8.3 Periodical Inspection) • The error code will disappear when the power switch is turned off. • After recovery, be careful not to exceed the rated duty cycle.
E-	310 311 313	Rotation problem of the cooling fan (*2)	• Clean dusts inside the welding power source. (☞ 8.3 Periodical Inspection) (Cooling fan may not work normally due to powder dust or foreign matter.) • If the problem persists, the cooling fan may be broken. Contact your dealer. • The error code will disappear when any key of the operation panel is pressed.
E-	510	Water-cooled pump abnormally (*1)	• Check for water leakage from the cooling water hose and ensure that sufficient cooling water is available. When using the air-cooled torch, check that LED of the TORCH key on the operation panel is off.
E-	615	Error of the backup memory data (*2)	• The error code will disappear when any key of the operation panel is pressed. • At the time, the welding conditions specified/registered and the settings of internal functions may be initialized. After the error is cleared, check that there is no problem in the data.
E-	710	The phase W of input voltage for primary side is not connected (*1)	• Check that there is no problem in input voltage for primary side and in cable wiring. • The error code will disappear when the power switch is turned off.

Error code		Error cause	Action and how to cancel error
E-	751	Temperature of re-ignition control circuit has exceeded allowable range. Surge voltage of secondary side switch has exceeded allowable level.	• Leave it untouched (with the power on), operate the cooling fan for 10 minutes or more, and then turn OFF the power switch. • Do not use unnecessary extension cable. • Check the state of extension cable and the extension cable mode setting. (☞ 4.2.2.1 Precautions for connections for AC TIG welding, 6.10.2.45 F62: Extended cable mode)
E-	951	There is a duplicate ID on a single bus (*1)	• Turn off the power switches of all other CAN-connected welding power sources, then turn on the power switches and check the setting of internal function F43. (☞ 6.10.2.34 F43: CAN ID) • The error code will disappear when the power switch is turned off.

9.2 Troubleshooting

This section explains the typical problems other than the error codes, their causes, and how to cope with them.
Check the table below before requesting repair service.

⚠ WARNING

- **Before inspecting the welding power source, make sure to read "8.1 Precautions for Maintenance and Inspection".**

No.	Problem	Possible cause	Corrective action
1	The power switch has tripped.	Leak has occurred in the welding power source.	DO NOT turn on the power switch. Contact your dealer.
2	The power LED switch does not light even when the power switch is turned on.	The primary power source is not supplied.	Supply the primary power source within 340 to 460 V.
3	Nothing is displayed on the right/left digital meters even when the power switch is turned on.		
4	"Temperature WARNING" LED lights and an error code is displayed when the power switch is turned on.	The protection circuit has been activated due to temperature error.	Leave it untouched (with the power on) and operate the cooling fan for 10 minutes or more, and then turn off the power. After the above, clean dusts inside the welding power source. Check the connection of the output terminal. (☞ 8.3 Periodical Inspection)
5	Shield gas is not flowing.	The valve of gas cylinder is closed.	Open the gas valve.
		The pressure of gas cylinder is insufficient.	Replace the gas cylinder.
		Setting/handling of the external inputs is not correct.	Check that the setting of internal functions F29 to F32 is correct. (☞ 6.10.2.25 F29 to F32: External input terminal setting)
		The external input cables are disconnected/short-circuited.	Check that there is no abnormality in the cables connected to the external input terminal block. If any, repair/replace the cables.
6	Shield gas does not stop flowing.	Setting/handling of the external inputs is not correct.	Check that the setting of internal functions F29 to F32 is correct. (☞ 6.10.2.25 F29 to F32: External input terminal setting)
		The external input cables are disconnected/short-circuited.	Check that there is no abnormality in the cables connected to the external input terminal block. If any, repair/replace the cables.

No.	Problem		Possible cause	Corrective action
7	High-frequency discharge occurs, but arc is not generated.		Connection of the torch cable is loose.	Securely connect the torch cable.
			The torch switch is broken.	Check that the torch switch works normally.
			Electrode has turned in white.	Grind the electrode.
			Electrode diameter is too large or current setting is too low.	Correct the electrode diameter and the current setting.
8	Setting of current value is incapable.		The automatic machine mode is selected.	Check that the setting of internal functions F4 is correct. (☞ 6.10.2.4 F4: Auto/Manual mode)
			An analog remote control (optional) is connected.	When an analog remote control (optional) is connected, the setting of the remote control has priority.
			The encoder is broken.	The printed circuit board PCB2 (P30086R00) needs to be replaced. Contact your dealer.
9	The mode dose not change even when the CRATER-FILL key is pressed. (The LED position does not change.)		Internal functions F45 and F48 are set to "ON".	Change the settings to "OFF".
10	The welding conditions cannot be set with the operation panel. The welding mode does not change even when switched with the operation panel.		The erroneous prevention function to prevent malfunction of the operation panel is enabled. (Erroneous operation prevention function)	Press and hold the ENTER key three seconds or more to disable the erroneous operation prevention function the operation panel.
11	The password is lost		-	Contact your dealer.
12	High-frequency discharge does not occur between the electrode and the base metal even after you press the torch switch.	Discharge spark sound is heard from the inside of the power supply.	Electrode has turned in white.	Grind the electrode.
			The cable (base metal side) is connected to the output terminal -. (High frequency is leaking.)	Connect the cable (base metal side) to the output terminal. (base metal side)
		Discharge spark sound is not heard from the inside of the welding power source.	Connector of a high-frequency generator came off.	Check the coming off of the connector of the printed circuit board P10536X.
13	Loss of arc occurs in pulse welding.		Base current value is 10 A or less.	Increase the base current value.

Chapter 10 Reference Materials

This chapter contains the parts list of welding power source, and reference materials for setting the welding conditions.

10.1 Parts List

This section shows the parts list of welding power source.

- **When placing an order, provide your dealer with the necessary information: the model name of welding power source, the name of the part to be replaced, and the part number (or specifications if part has no number).**

  The period of supplying parts will be at the shortest approximately seven years after the welding power source is manufactured. It may change, however, if the parts from other companies cannot be supplied.

- **The codes in the table correspond to those in the schematic diagram/parts layout drawing.**

Code	Part No.	Product Name	Specifications	Q'ty	Remarks
NF	100-1568	Circuit protector	CA3-B0-24-640-41D-C	1	
PL1	100-0171	Pilot lamp	N46010A7KW-01	1	
DR1	4531-204	Diode module	DFA75BA160	1	
DR2 to 7	4531-308	Diode module	DBA200UA60	6	
DR8	100-2291	Diode module	PT100SN8	1	
DR9, 10	4531-119	Diode module	DSEI 2X101-06A	2	
DR11	4531-710	Diode	D1N60	1	
TR1 to 4	4534-416	IGBT module	CM100DUS-12F	4	
TR5, 6	100-3129	IGBT module	2MBI300XBE-065-50	2	
TR7	100-2381	IGBT	GT50JR21	1	
CT1	4810-030	Current transformer	W-W03029	1	
CT2	100-0956	Hall current detector	CS-40GEH	1	
T1	P30160B00	Inverter transformer	P30160B00	1	
T2	W-W04046	Auxiliary transformer	W-W04046	1	
C.C.	P30160C00	Coupling coil	P30160C00	1	
L1	P30086L00	Input reactor	P30086L00	1	
L2	P30160H00	Reactor	P30160H00	1	
L3	100-1950	Ferrite core	TW70W(R402715)	2	
L4	100-1950	Ferrite core	E04RA400270150	2	
L5	100-1950	Ferrite core	E04RA400270150	2	
L6	100-2002	Ferrite core	SN-20 OR 23.5X9 5X12.6	2	
L7, 8	4739-543	Ferrite core	E04RA310190100	2	
L11	4739-543	Ferrite core	E04RA310190100	1	
L12	100-1950	Ferrite core	TW70W(R402715)	2	
L13	100-1950	Ferrite core	TW70W(R402715)	1	
	100-0618	Ferrite core	HM2AT4815	1	
L14	100-0618	Ferrite core	HM2AT4815	1	
L15	100-1950	Ferrite core	TW70W(R402715)	2	
L16	100-1950	Ferrite core	TW70W(R402715)	2	
L17	100-0618	Ferrite core	HM2AT4815	1	
THP1	4614-051	Thermostat	67L090	1	
THP2	100-0123	Thermostat	US-602SXTTAS 130 ℃	1	
THP3	100-0657	Thermostat	US-602SXTTAS 150 ℃	1	
FM1,2	100-1429	Fan	9WV1224P1H003	2	
FM4	100-1825	Fan	9G1224E1D07	1	
SOL	4813-046	Gas solenoid valve	TYPE5511DC24V	1	
R1 to 3	100-1528	Surge absorber	TND14V-911KB0LLAA0	3	

Code	Part No.	Product Name	Specifications	Q'ty	Remarks
R4	100-1528	Surge absorber	TND14V-911KB0LLAA0	1	
R5 to 10	100-0234	Carbon resistor	RD20S 1kΩJ	6	
R11 to 14	100-1430	Metal film resistor	RPM200Z 5Ω	4	
R15a,b	100-3128	Metal-clad resistor	SMR220W 330J/R0	2	
R16a,b	100-3128	Metal-clad resistor	SMR220W 330J/R0	2	
R17	4504-503	Winding wound resistor	GG80W 200ΩJ	1	
R18	100-0662	Thermistor	EC2F103A2-40113	1	
R20 to 23	4508-317	Carbon resistor	RD1/2S 3kΩJ	4	
R24	4509-038	Fixed Metal Oxide Film Resistor	RS3B 200kΩ	1	
R25	100-3131	Cement resistor	20XXL 20k0HMJ	1	
R26	4509-704	Carbon resistor	RD1/4W 1kΩJ	1	
R27	4504-944	Winding resistor	KNP1W 10ΩJ	1	
R28	100-1430	Metal film resistor	RPM200Z 5Ω	1	
R29	4509-809	Cement resistor	20SH 8.2kΩK	1	
R30, 31	4509-905	Cement resistor	MHR20A513J1	2	
R32	100-1571	Winding resistor	CS1P 100ΩJ	1	
R33	4509-918	Cement resistor	40SH 200ΩJ	1	
R34	4509-704	Carbon resistor	RD1/4W 1kΩJ	1	
R35, 36	100-0234	Carbon resistor	RD20S 1kΩJ	2	
C5 to 8	100-1434	Film capacitor	FHC(180)2000V682J	4	
C9	100-1072	Ceramics capacitor	CF17-F2GA103MYGS	1	
C10a,b	4518-411	Film capacitor	EM351200D0BA1HP	2	
C11	4518-411	Film capacitor	EM351200D0BA1HP	1	
C12	4518-497	Film capacitor	DHS630V103JSL	1	
C13	4518-541	Film capacitor	US63Y105JAASA	1	
C14	4511-314	Aluminum electrolytic capacitor	LNR2G152MSEB(400V,1500 MF)	1	
C15	100-0227	Film capacitor	QYX1H 474JTP	1	
C16	100-1712	Film capacitor	FHC(180)2000V103J	1	
CON1	100-0095	Receptacle	DPC25-2BP	1	
CON2	4730-006	Receptacle	DPC25-4BP	1	
CON3	4730-192	Receptacle	VLP-03V	1	
CON4	4730-193	Receptacle	ELP-06P	1	
CR1	4341-139	Relay	G2R-1-T DC24V	1	
TM6	100-2234	Termnal	DG15HS-1.2-04P-17-100A(H)	1	
DCV1	K5791B00	Power supply	K5791B00	1	Output DC24V
LF1	100-2233	EMI FILTER	TAC-30-683	1	
F1	100-3393	Fuse	0213005.MXP	1	
PCB1	P30160P00	Printed circuit board	P30160P00	1	(*1)
	4341-206	Relay	G6A-274P DC24V	1	With PCB1
PCB2	P30086R00	Printed circuit board	P30086R00	1	
	100-1421	Encoder	EVEGA1F2524B	1	With PCB2
PCB3	P30133Q00	Printed circuit board	P30133Q00	1	
PCB4	P10536X00	Printed circuit board	P10536X00	1	
PCB5, 6	P30086V00	Printed circuit board	P30086V00	2	
PCB7	P30099M00	Printed circuit board	P30099M00	1	
PCB8	P30174T00	Printed circuit board	P30174T00	1	
PCB9	P30174S00	Printed circuit board	P30174S00	1	
PCB10	P30086S00	Printed circuit board	P30086S00	1	
PCB11	P30205S00	Printed circuit board	P30205S00	1	
PCB12	P30160V00	Printed circuit board	P30160V00	1	
(1)	P30086G01	Mold cover	P30086G01	1	Upper side cover
(2)	P30086G02	Mold cover	P30086G02	1	Under side cover

Code	Part No.	Product Name	Specifications	Q'ty	Remarks
(3)	P30248W02	Operation panel sheet	P30248W02	1	
(4)	W-W03636	Cap	W-W03636	1	For P30086G01
(5)	4734-007	Soket	DIX BE 50/70	2	
(6)	100-1436	Handle cover	DCP73BH	1	For NF
(7)	4739-476	Cap	W-W02814	2	For CON1, 2
(8)	4735-038	Knob	K-100 22RSB	1	Parameter adjusting knob
(9)	4735-039	Cap	K-100 22CSBL	1	
(10)	4739-475	Rubber foot	C-30-RK-3220	4	

*1 : When placing an order the printed circuit board: P30160P00, give the operator the software version No. "P30248 Ver***.***.000.000" described on the indication plate located (under the input terminal fixture) on the rear of welding power source.

- Analog remote control (K5023L00) parts list (Optional)

Code	Part No.	Product Name	Specifications	Q'ty
R29, 30	4501-039	Variable resistor	RV24YN20SB 5KΩ	2
R31	100-0487	Carbon resistor	RD20S 12ΩJ	1
	4730-005	Metal connector plug	DPC25-4A	1
	4735-007	Knob	K-2195 (Large)	2
	3361-655	Cosmetic screw	N-3 M5 L = 10 (Black)	1

10.2 Reference Drawing

This section contains the schematic diagram and the parts layout drawing of the welding power source.

10.2.1 Schematic diagram

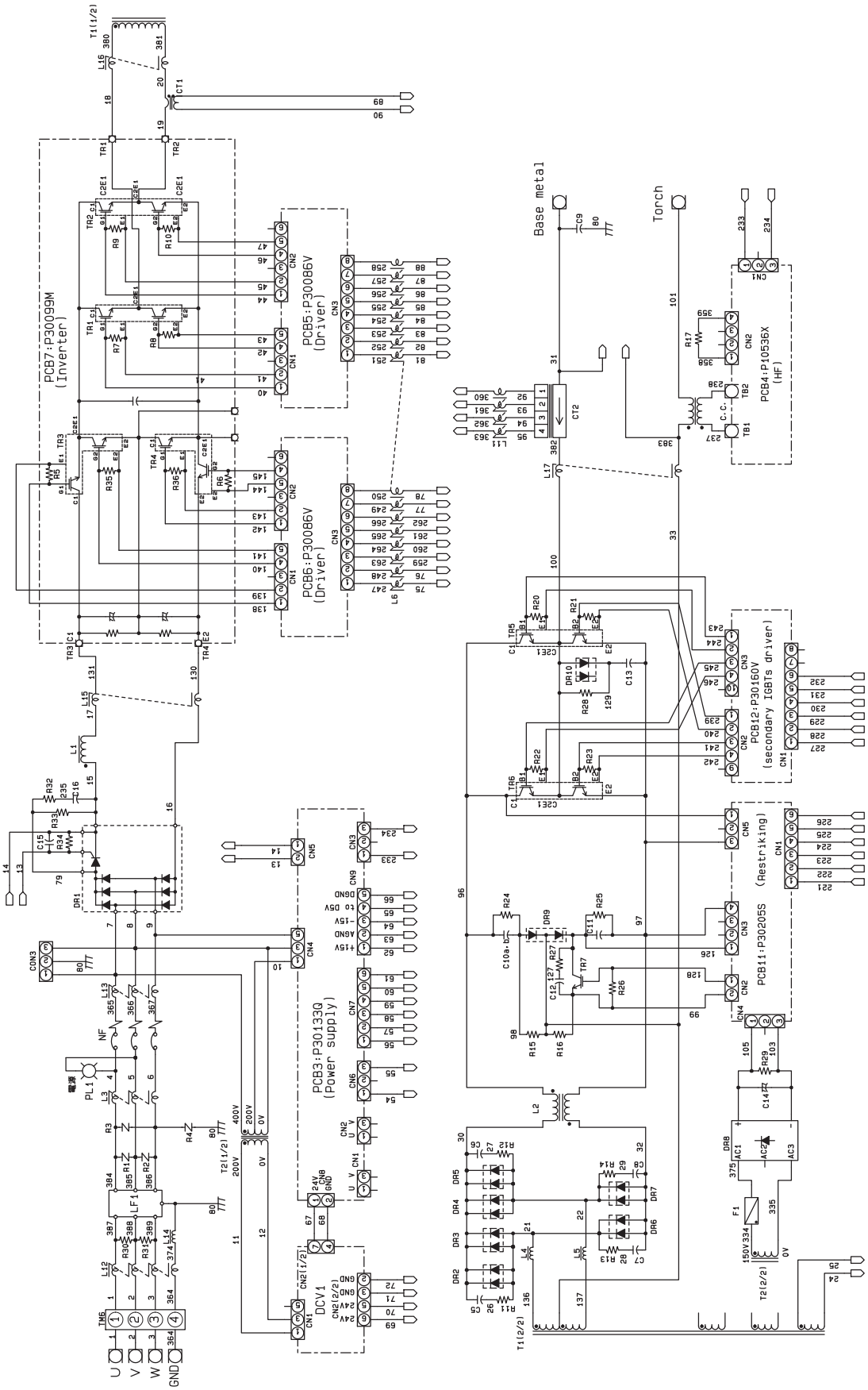

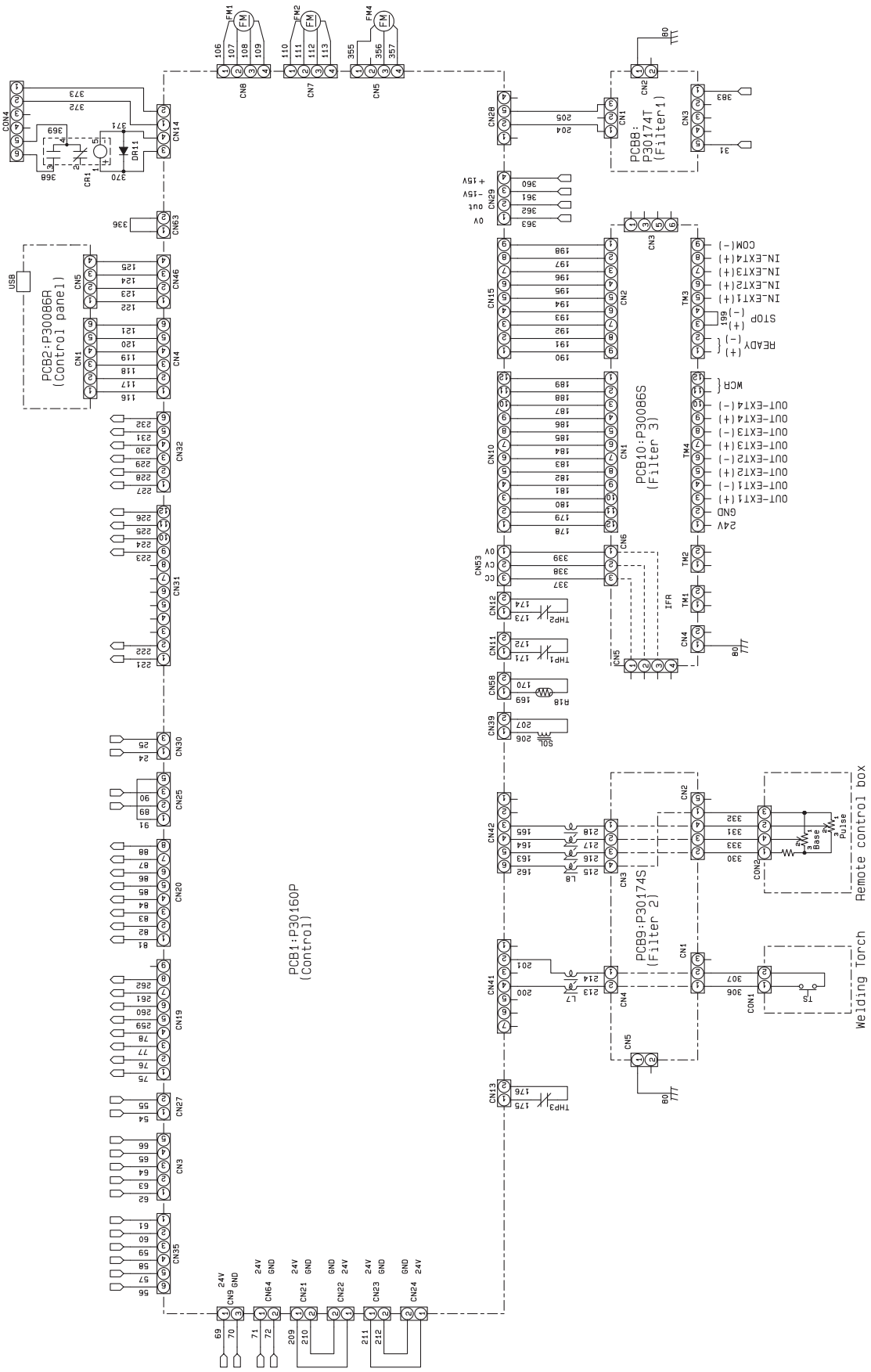
PCB1:P30160P
(Control)
PCB2:P30086R
(Control panel)
PCB8:
P30174T
(Filter1)
PCB9:P30174S
(Filter 2)
PCB10:P30086S
(Filter 3)
Remote control box
Welding Torch

10.2.2 Parts layout drawing

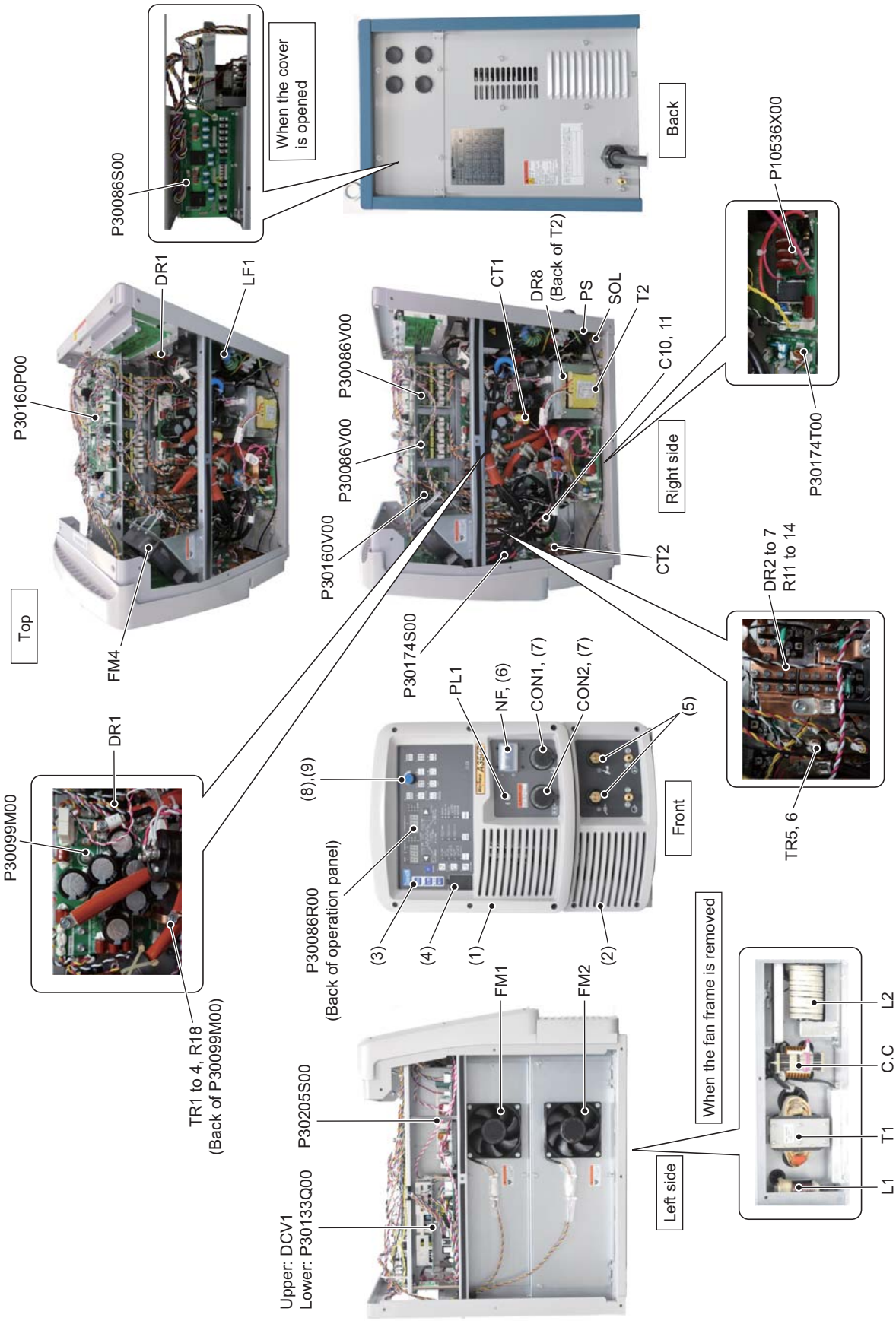

10.3 Materials for Setting Welding Conditions

This section provides reference information for setting the welding conditions.

10.3.1 Guide for changing welding conditions

This section gives examples of the problems that can occur due to improper welding conditions.

Problem	Symptom
The wire feeding length is too long.	• The arc length becomes long. • The bead width becomes wide. • Shielding becomes poor.
The wire feeding length is too short.	• The arc length becomes short. • Spatter is generated.
The welding voltage is too high.	• The arc length becomes long. • The bead width becomes wide. • Penetration and bead become small.
The welding voltage is too low.	• The wire contacts the base metal and spatter is generated. • The bead width becomes narrow.
The welding current is too high.	• The bead width becomes wide. • Penetration and bead become large.
The welding speed is too high.	• The bead width becomes narrow. • Penetration and bead become small.

10.3.2 Samples of welding condition settings

This section provides samples of common welding condition settings.
The values are for reference purpose. Adjust them according to the shape of actual weld zone and position of welding.

10.3.2.1 TIG welding condition (for reference)

- General TIG welding condition (used with Pulse set to "OFF".)

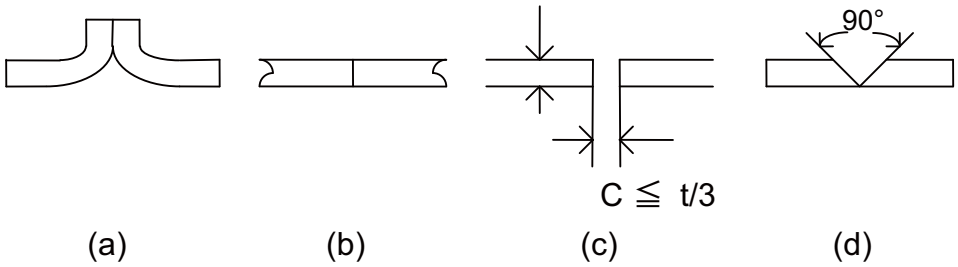

Material	Thickness (mm)	Electrode diameter (mmΦ)	Filler wire (mm)	Current (A)	Argon gas flow rate (L/min)	Number of layers	Bevel shape
Bevel shape (DC)	0.1	1	-	1 to 2	4 to 6	1	(a)
	0.2	1	-	2 to 3	4 to 6	1	(a)
	0.3	1	-	5 to 6	4 to 6	1	(a)
	0.6	1, 1.6	to 1.6	20 to 40	4	1	(a)
	1.0	1, 1.6	to 1.6	30 to 60	4	1	(a)
	4.0	2.4, 3.2	2.4 to 3.2	130 to 180	5	1	(c), (d)
	4.8	2.4, 3.2, 4	2.4 to 4.0	150 to 220	5	1	(c), (d)
	6.4	3.2, 4, 4.8	3.2 to 4.8	180 to 250	5	1 to 2	(c), (d)
Killed steel (DC)	0.6	1, 1.6	to 1.6	50 to 70	3 to 4	1	(a)
	1.0	1.6	to 1.6	60 to 90	3 to 4	1	(a)
	3.2	3.2, 4	3.2 to 4.8	140 to 200	4 to 5	1	(b)
	4.0	3.2, 4, 4.8	4.0 to 4.8	180 to 250	4 to 5	1	(c), (d)
	4.8	4, 4.8	4.8 to 6.4	250 to 300	5 to 6	1	(c), (d)
	6.4	4, 4.8, 6.4	4.8 to 6.4	300 to 400	5 to 6	1 to 2	(c), (d)
Aluminum (AC)	1.0	1.6	0 to 1.6	50 to 60	5 to 6	1	(a), (b)
	1.6	1.6, 2.4	0 to 1.6	60 to 90	5 to 6	1	(a), (b)
	2.4	1.6, 2.4	1.6 to 2.4	80 to 110	6 to 7	1	(b)
	3.2	2.4, 3.2	2.4 to 4.0	100 to 140	6 to 7	1	(b)
	4.0	3.2, 4.0	3.2 to 4.8	140 to 180	7 to 8	1	(b)
	4.8	3.2, 4.0, 4.8	4.0 to 6.4	170 to 220	7 to 8	1	(b)
	6.4	4.0, 4.8	4.0 to 6.4	200 to 270	8 to 12	1 to 2	(d), (c)
Thermocouple	0.2 (*)	1.0	0	1 to 2	4 to 6	-	-
	0.5 (*)	1.0	0	2 to 3	4 to 6	-	-

*: Wire diameter

- DC TIG pulse welding condition
  - For Downward butt welding

Material	Joint shape	Gap G (mm)	Pulse condition				Travel speed (cm/min)	Filler wire feed speed (cm/min)
			Pulse current (A)	Base current (A)	Frequency (Hz)	Pulse width (%)		
Mild steel spcc	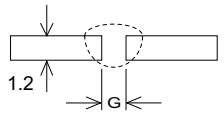	0	200	50	2.5	50	60	60
		1.2	150	20	1.5	46	30	60
		1.6	130	20	1	50	15	40
Stainless steel SUS304	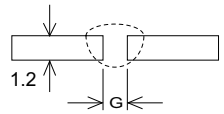	0	150	50	3.1	50	80	0
		1.2	150	20	1	35	17	40
		1.6	130	20	0.8	30	10	40
		2.0	130	20	0.8	30	83	40
Copper C1100P	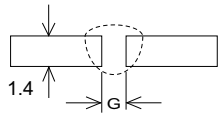	0	280	50	3.1	50	80	0
		1.2	280	50	2	50	50	75
		1.6	280	30	1.5	42	25	75
Titanium TP270	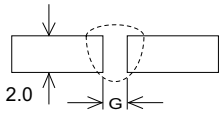	0	200	100	1	30	25	0

Shield gas: Argon (10 L/min)
Filler wire: 1.2 mmΦ
Electrode: Tungsten electrode with cerium (3.2 mmΦ)
Arc length: 2 mm

  - For welded joint with different heat capacity

Material	Joint shape	Number of layers	Pulse condition				Travel speed (cm/min)	Filler wire feed speed (cm/min)
			Pulse current (A)	Base current (A)	Frequency (Hz)	Pulse width (%)		
Copper + Mild steel	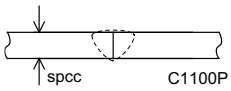	1	250	50	0.8	20	10	60 (Cu)
Stainless steel + Mild steel	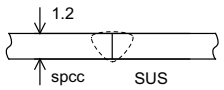	1	170	60	2.5	50	50	60 (SUS)
Mild steel	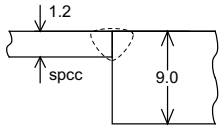	1	120	50	2	50	20	30
Stainless steel	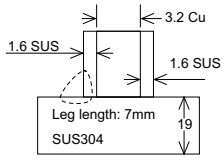	4	160	50	1.5	46	8.5	60

Shield gas: Argon (10 L/min)
Filler wire: 1.2 mmΦ
Electrode: Tungsten electrode with cerium (2.4 mmΦ)
Arc length: 2 to 3 mm

- AC TIG pulse welding conditions

Material	Joint shape	Thickness (mm)	Pulse condition				Filler wire	
			Pulse current (A)	Base current (A)	Frequency (Hz)	Pulse width (%)	Diameter (mmΦ)	Feed speed (cm/min)
Aluminum		1.0	70	25	1	50	1.6	75
		1.5	80	40	1	50	1.6	95
		1.5	90	25	1	50	1.6	75
		1.5	85	25	1	50	1.2	95
		3.2	170	25	1	50	1.2	290
		3.0	170	25	1	50	1.6	170
		6.0	220	25	1	50	1.6	250
	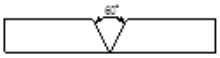	6.0	180	25	1	50	1.6	250
	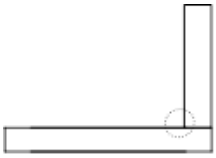	3.2	170	25	1	50	1.2	290
		6.0	220	25	1	50	1.6	270
	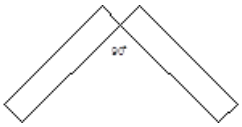	3.0	120	25	1	50	1.6	60

- Post-flow time
  Adjust to match the electrode diameter, referring to the table below.

Electrode diameter (mm)	Post-flow time (sec.)
1.6	3 to 5
2.4	5 to 8
3.2	8 to 12
4.0	12 to 17
4.8	17 to 21
6.4	21 to 26

Welding condition table when thickness of plates are different (for reference only)

- Mild steel
  - T fillet joint

Plate thickness (1) (mm)	Plate thickness (2) (mm)	Plate thickness (2) (mm)	Welding current (A)	Filler wire dia. (mmΦ)	Argon flow rate (L/min)
1.2	1.6	2.4	65	1.6	6 to 8
	2.3	2.4	80	1.6	6 to 8
	3.2	2.4	80	1.6	6 to 8
1.6	2.3	2.4	95	1.6	6 to 8
	3.2	2.4	110	1.6	6 to 8
	4.5	2.4	120	2.4	6 to 8
2.3	1.6	2.4	85	1.6	6 to 8
	3.2	2.4	140	2.4	6 to 8
	4.5	2.4	160	2.4	7 to 9
	6.0	2.4	160	2.4	7 to 9
3.2	1.6	2.4	100	1.6	6 to 8
	2.3	2.4	135	1.6	6 to 8
	4.5	2.4	175	2.4	7 to 9
	6.0	2.4	190	2.4	9 to 11
4.5	2.3	2.4	160	2.4	7 to 9
	3.2	2.4	185	2.4	7 to 9
	6.0	3.2	260	4.0	9 to 11
6.0	3.2	3.2	200	2.4	9 to 11
	4.5	3.2	270	4.0	9 to 11

  - Butt joint

Plate thickness (1) (mm)	Plate thickness (2) (mm)	Plate thickness (2) (mm)	Welding current (A)	Filler wire dia. (mmΦ)	Argon flow rate (L/min)
0.8	1.0	1.6	25	0	5 to 7
	1.2	1.6	30	0	5 to 7
	1.6	1.6	40	0	6 to 8
	2.3	2.4	55	0	7 to 9
1.0	1.2	1.6	35	0	5 to 7
	1.6	2.4	50	0	6 to 8
	2.3	2.4	65	0	6 to 8
	3.2	2.4	75	1.6	6 to 8
1.2	1.6	2.4	60	1.6	6 to 8
	2.3	2.4	70	1.6	6 to 8
	3.2	2.4	80	1.6	6 to 8
1.6	2.3	2.4	80	2.4	6 to 8
	3.2	2.4	100	2.4	6 to 8
	4.5	2.4	110	2.4	6 to 8
2.3	3.2	2.4	110	2.4	6 to 8
	4.5	2.4	125	2.4	6 to 8
	6.0	2.4	140	2.4	6 to 8
3.2	4.5	2.4	145	2.4	6 to 8
	6.0	2.4	160	2.4	7 to 9
4.5	6.0	3.2	210	2.4	9 to 11

– Butt joint

Plate thickness (1) (mm)	Plate thickness (2) (mm)	Plate thickness (2) (mm)	Welding current (A)	Filler wire dia. (mmΦ)	Argon flow rate (L/min)
0.8	1.0	1.6	30	0	5 to 7
	1.2	1.6	35	0	5 to 7
	1.6	1.6	45	0	6 to 8
	2.3	2.4	65	1.6	6 to 8
1.0	1.2	1.6	40	1.6	6 to 8
	1.6	2.4	55	1.6	6 to 8
	2.3	2.4	70	1.6	6 to 8
	3.2	2.4	80	2.4	6 to 8
1.2	1.0	2.4	50	1.6	6 to 8
	1.6	2.4	65	1.6	6 to 8
	2.3	2.4	80	1.6	6 to 8
	3.2	2.4	85	1.6	6 to 8
	4.5	2.4	100	1.6	6 to 8
	6.0	2.4	120	2.4	6 to 8
1.6	1.0	2.4	50	1.6	6 to 8
	1.2	2.4	60	1.6	6 to 8
	2.3	2.4	85	1.6	6 to 8
	3.2	2.4	105	2.4	6 to 8
	4.5	2.4	115	2.4	6 to 8
	6.0	2.4	130	2.4	6 to 8
2.3	1.0	2.4	55	1.6	6 to 8
	1.2	2.4	65	1.6	6 to 8
	1.6	2.4	80	1.6	6 to 8
	3.2	2.4	120	2.4	6 to 8
	4.5	2.4	135	2.4	6 to 8
	6.0	2.4	150	2.4	7 to 9
3.2	1.0	2.4	65	1.6	6 to 8
	1.2	2.4	75	1.6	6 to 8
	1.6	2.4	90	1.6	6 to 8
	2.3	2.4	120	2.4	6 to 8
	4.5	2.4	150	2.4	7 to 9
	6.0	2.4	170	2.4	7 to 9
4.5	1.6	2.4	110	2.4	6 to 8
	2.3	2.4	130	2.4	6 to 8
	3.2	2.4	150	2.4	7 to 9
	6.0	3.2	220	4.0	9 to 11
6.0	3.2	2.4	190	2.4	9 to 11
	4.5	3.2	245	4.0	9 to 11

- Stainless steel
  - T fillet joint

Plate thickness (1) (mm)	Plate thickness (2) (mm)	Plate thickness (2) (mm)	Welding current (A)	Filler wire dia. (mmΦ)	Argon flow rate (L/min)
1.2	1.5	2.4	53	1.6	6 to 8
	2.0	2.4	70	1.6	6 to 8
1.5	2.0	2.4	75	1.6	6 to 8
	3.0	2.4	95	2.4	6 to 8
	4.0	2.4	100	2.4	7 to 9
2.0	1.5	2.4	65	1.6	6 to 8
	3.0	2.4	110	2.4	7 to 9
	4.0	2.4	130	2.4	7 to 9
	6.0	2.4	150	2.4	9 to 11
3.0	1.5	2.4	75	1.6	6 to 8
	2.0	2.4	110	1.6	7 to 9
	4.0	2.4	160	2.4	9 to 11
	6.0	2.4	175	2.4	9 to 11
4.0	2.0	2.4	130	2.4	7 to 9
	3.0	2.4	165	2.4	9 to 11
	6.0	3.2	230	4.0	11 to 13
6.0	3.0	2.4	190	2.4	9 to 11
	4.0	3.2	230	4.0	11 to 13

  - Butt joint

Plate thickness (1) (mm)	Plate thickness (2) (mm)	Plate thickness (2) (mm)	Welding current (A)	Filler wire dia. (mmΦ)	Argon flow rate (L/min)
0.8	1.0	1.6	25	0	5 to 7
	1.2	1.6	30	0	5 to 7
	1.5	1.6	40	0	5 to 7
	2.0	1.6	45	0	6 to 8
1.0	1.2	1.6	30	0	5 to 7
	1.5	1.6	45	0	6 to 8
	2.0	2.4	55	0	6 to 8
	3.0	2.4	60	1.6	6 to 8
1.2	1.5	2.4	50	1.6	6 to 8
	2.0	2.4	60	1.6	6 to 8
	3.0	2.4	75	1.6	6 to 8
1.5	2.0	2.4	60	1.6	6 to 8
	3.0	2.4	80	1.6	6 to 8
	4.0	2.4	90	2.4	6 to 8
2.0	3.0	2.4	90	1.6	6 to 8
	4.0	2.4	105	2.4	7 to 9
	6.0	2.4	130	2.4	7 to 9
3.0	4.0	2.4	120	2.4	7 to 9
	6.0	2.4	140	2.4	7 to 9
4.0	6.0	2.4	180	2.4	9 to 11

– Lap joint

Plate thickness (1) (mm)	Plate thickness (2) (mm)	Plate thickness (2) (mm)	Welding current (A)	Filler wire dia. (mmΦ)	Argon flow rate (L/min)
0.8	1.0	1.6	25	0	5 to 7
	1.2	1.6	30	0	5 to 7
	1.5	1.6	40	0	6 to 8
	2.0	1.6	50	1.6	6 to 8
1.0	1.2	1.6	35	1.6	5 to 7
	1.5	1.6	45	1.6	6 to 8
	2.0	2.4	55	1.6	6 to 8
	3.0	2.4	65	1.6	6 to 8
1.2	1.0	1.6	38	0	6 to 8
	1.5	2.4	50	1.6	6 to 8
	2.0	2.4	65	1.6	6 to 8
	3.0	2.4	75	1.6	6 to 8
	4.0	2.4	90	1.6	6 to 8
	6.0	2.4	110	1.6	7 to 9
1.5	1.0	1.6	45	0	6 to 8
	1.2	2.4	50	1.6	6 to 8
	2.0	2.4	70	1.6	6 to 8
	3.0	2.4	90	1.6	6 to 8
	4.0	2.4	100	2.4	7 to 9
	6.0	2.4	120	2.4	7 to 9
2.0	1.2	2.4	55	0	6 to 8
	1.5	2.4	65	1.6	6 to 8
	3.0	2.4	105	2.4	7 to 9
	4.0	2.4	120	2.4	7 to 9
	6.0	2.4	140	2.4	7 to 9
3.0	1.2	2.4	65	1.6	6 to 8
	1.5	2.4	70	1.6	6 to 8
	2.0	2.4	90	2.4	7 to 9
	4.0	2.4	130	2.4	7 to 9
	6.0	2.4	155	2.4	9 to 11
4.0	2.0	2.4	105	2.4	7 to 9
	3.0	2.4	130	2.4	7 to 9
	6.0	3.2	200	4.0	11 to 13
6.0	3.0	2.4	170	2.4	9 to 11
	4.0	3.2	200	4.0	11 to 13

– Corner joint

Plate thickness (1) (mm)	Plate thickness (2) (mm)	Plate thickness (2) (mm)	Welding current (A)	Filler wire dia. (mmΦ)	Argon flow rate (L/min)
0.5	1.0	1.6	20	0	5 to 7
	1.2	1.6	23	0	5 to 7
	1.5	1.6	30	0	5 to 7
	2.0	1.6	35	0	6 to 8
0.8	1.0	1.6	23	0	5 to 7
	1.2	1.6	30	0	5 to 7
	1.5	1.6	40	0	6 to 8
	2.0	1.6	45	0	6 to 8
	3.0	2.4	55	0	6 to 8
1.0	1.2	1.6	30	0	5 to 7
	1.5	1.6	45	0	6 to 8
	2.0	2.4	50	0	6 to 8
	3.0	2.4	60	0	6 to 8
	4.0	2.4	65	0	6 to 8
1.2	1.5	2.4	50	0	6 to 8
	2.0	2.4	60	0	6 to 8
	3.0	2.4	65	0	6 to 8
	4.0	2.4	70	0	6 to 8
	6.0	2.4	80	1.6	6 to 8
1.5	2.0	2.4	65	0	6 to 8
	3.0	2.4	75	0	6 to 8
	4.0	2.4	80	0	6 to 8
	6.0	2.4	90	1.6	6 to 8
2.0	3.0	2.4	80	1.6	6 to 8
	4.0	2.4	90	1.6	6 to 8
	6.0	2.4	110	2.4	7 to 9
3.0	4.0	2.4	105	1.6	7 to 9
	6.0	2.4	130	2.4	7 to 9
4.0	6.0	2.4	165	2.4	9 to 11

PoWer TIG Series

GeKaMac®

Gedik Welding Inc.
Ankara Caddesi No: 306 Şeyhli 34906 Pendik - İstanbul / Turkey
P. +90 216 378 50 00 • **F.** +90 216 378 20 44
www.gedikwelding.com